RCA2-SA2AC

RoboCylinder Mini Slider Type Motor Unit Coupling Type Actuator Width 20 mm 24 V Servo Motor Ball Screw Specification

■Model Description

RCA2 – SA2AC – I – 5 – ☐ – ☐ – ☐ – ☐ – ☐ – ☐

Series	Type	Encoder type	Motor type	Lead	Stroke	Compatible Controllers	Cable Length	Option
		I: Incremental specification * Model number is "I" when used with simple absolute unit.	5: Servo Motor 5W	4: 4mm 2: 2mm 1: 1mm	25: 25mm ~ 100: 100mm (every 25mm)	A3: ASEP	N: None P: 1m S: 3m M: 5m X☐☐: Length Designation	Following options Refer to below table

*See page 13 for details on the model descriptions.

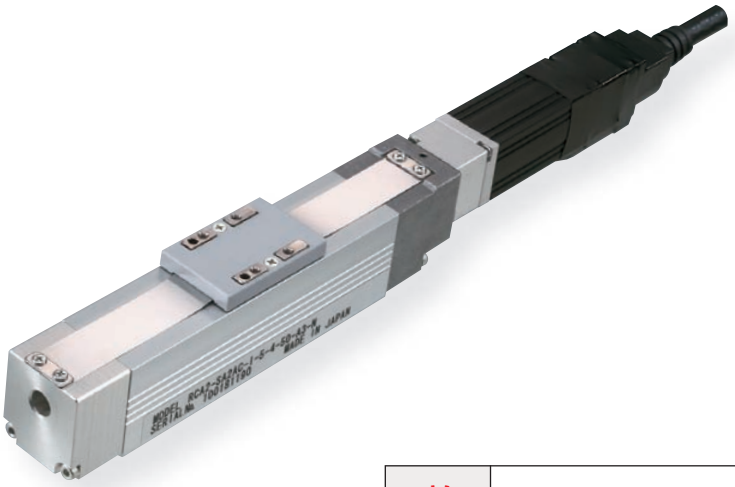

POINT Notes on selection

(1) The payload is the value when operated at 0.3G acceleration.
The acceleration upper limit is the value indicated above.

(2) Take note that, since there is no brake, the slider may come down when the power is turned off if the actuator is used vertically.

Actuator Specification Table

■Leads and Payloads

Model	Feed screw	Lead (mm)	Maximum payload Horizontal (kg)	Maximum payload Vertical (kg)	Positioning Repeatability (mm)	Stroke (mm)
RCA2-SA2AC-I-5-4-①-A3-②-③	Ball screw	4	0.5	0.25	±0.02	25 to 100 (every 25mm)
RCA2-SA2AC-I-5-2-①-A3-②-③		2	1	0.5		
RCA2-SA2AC-I-5-1-①-A3-②-③		1	2	1		

Legend ① Stroke ② Cable length ③ Option

■Stroke and Maximum Speed

	Lead \ Stroke	25 (mm)	50 to 100 (mm)
Ball screw	4	180	200
	2	100	
	1	50	

(Unit = mm/s)

Cable length

Type	Cable symbol	
Standard type (Robot cable)	**P** (1m)	
	S (3m)	
	M (5m)	
Special length	**X06** (6m) to **X10** (10m)	
	X11 (11m) to **X15** (15m)	
	X16 (16m) to **X20** (20m)	

* The standard cable for the RCA2 is the robot cable.

Actuator Specification

Item	Description
Drive System	Ball screw, φ4mm, rolled C10
Lost Motion	0.1mm or less
Base	Material: Aluminum, white alumite treated
Guide	Linear guide
Allowable Dynamic Moment	Ma: 0.22N·m Mb: 0.31N·m Mc: 0.28N·m
Allowable Overhang	40mm or less in Ma, Mb and Mc directions
Ambient Operating Temp., Humidity	0 to 40 ˚C, 85% RH or less (No condensation)
Service life	5000km

Options

Title	Option code	See page	
Reversed-home specification	**NM**	–	

Dimensional Drawings

CAD drawings can be downloaded from the website. www.robocylinder.de

2/3D CAD

*1 Connect the motor and encoder cables.
*2 During home return, be careful to avoid interference from peripheral objects because the slider travels until the mechanical end.
*3 The direction of the surface across flats varies depending on the product.

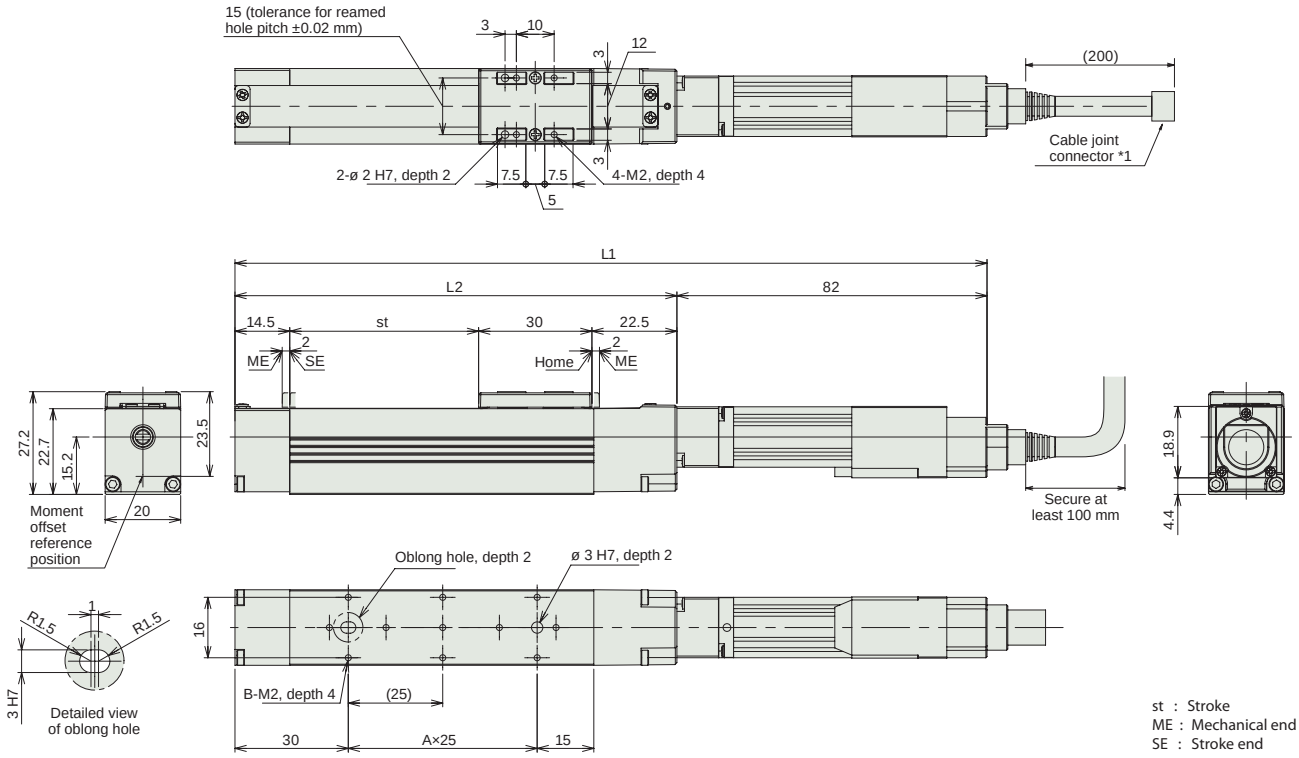

st : Stroke
ME : Mechanical end
SE : Stroke end

■ Dimensions and Weight by Stroke

Stroke	25	50	75	100
L1	174	199	224	249
L2	92	117	142	167
A	1	2	3	4
B	4	6	8	10
Mass (kg)	0.2	0.22	0.23	0.25

Compatible Controllers

RCA2 series actuators can be operated with the controllers indicated below. Select the type according to your intended application.

Title	External View	Model	Features	Maximum number of positioning points	Input power	Power-supply capacity		Reference Page
Solenoid valve type		ASEP-C-5SI-NP-2-0	Simple controller capable of operating with the same signal as the solenoid valve. Supports the use of both the single solenoid and the double solenoid types. Simple Absolute type makes the return to home unnecessary.	3 points	DC24V	(Standard) 1.5A rated 2.5A max.		→P123
Dust-proof solenoid valve type		PSEP-CW-5SI-NP-2-0						

RCA2-SA2AR

RoboCylinder Mini Slider Type Motor Unit Reverse-mounted Type Actuator Width 20 mm 24 V Servo Motor Ball Screw Specification

■Model Description

RCA2 – SA2AR – I – 5 – ☐ – ☐ – ☐ – ☐ – ☐

Series	Type	Encoder type	Motor type	Lead	Stroke	Compatible Controllers	Cable Length	Option
		I: Incremental specification * Model number is "I" when used with simple absolute unit.	5: Servo Motor 5W	4: 4mm 2: 2mm 1: 1mm	25: 25mm ~ 100: 100mm (every 25mm)	A3: ASEP	N: None P: 1m S: 3m M: 5m X☐☐: Length Designation	Following options Refer to below table * Be sure to specify which side the motor is to be mounted (ML/MR)

*See page 13 for details on the model descriptions.

POINT Notes on selection

(1) The payload is the value when operated at 0.3G acceleration. The acceleration upper limit is the value indicated above.

(2) Take note that, since there is no brake, the slider may come down when the power is turned off if the actuator is used vertically.

Actuator Specification Table

■Leads and Payloads

Model	Feed screw	Lead (mm)	Maximum payload Horizontal (kg)	Maximum payload Vertical (kg)	Positioning Repeatability (mm)	Stroke (mm)
RCA2-SA2AR-I-5-4-①-A3-②-③	Ball screw	4	0.5	0.25	±0.02	25 to 100 (every 25mm)
RCA2-SA2AR-I-5-2-①-A3-②-③		2	1	0.5		
RCA2-SA2AR-I-5-1-①-A3-②-③		1	2	1		

Legend ① Stroke ② Cable length ③ Option

■Stroke and Maximum Speed

Lead	Stroke	25 (mm)	50 to 100 (mm)
Ball screw	4	180	200
	2	100	
	1	50	

(Unit = mm/s)

Cable length

Type	Cable symbol	
Standard type (Robot cable)	**P** (1m)	
	S (3m)	
	M (5m)	
Special length	**X06** (6m) to **X10** (10m)	
	X11 (11m) to **X15** (15m)	
	X16 (16m) to **X20** (20m)	

* The standard cable for the RCA2 is the robot cable.

Actuator Specification

Item	Description
Drive System	Ball screw, φ4mm, rolled C10
Lost Motion	0.1mm or less
Base	Material: Aluminum, white alumite treated
Guide	Linear guide
Allowable Dynamic Moment	Ma: 0.22N·m Mb: 0.31N·m Mc: 0.28N·m
Allowable Overhang	40mm or less in Ma, Mb and Mc directions
Ambient Operating Temp., Humidity	0 to 40 ˚C, 85% RH or less (No condensation)
Service life	5000km

Options

Title	Option code	See page	
Reversed-home specification	**NM**	–	
Motor side mounted to the right	**MR**	–	
Motor side mounted to the left	**ML**	–	

Dimensional Drawings

CAD drawings can be downloaded from the website. www.robocylinder.de

2/3D CAD

*1 Connect the motor and encoder cables.
*2 During home return, be careful to avoid interference from peripheral objects because the slider travels until the mechanical end.
*3 The direction of the surface across flats varies depending on the product.

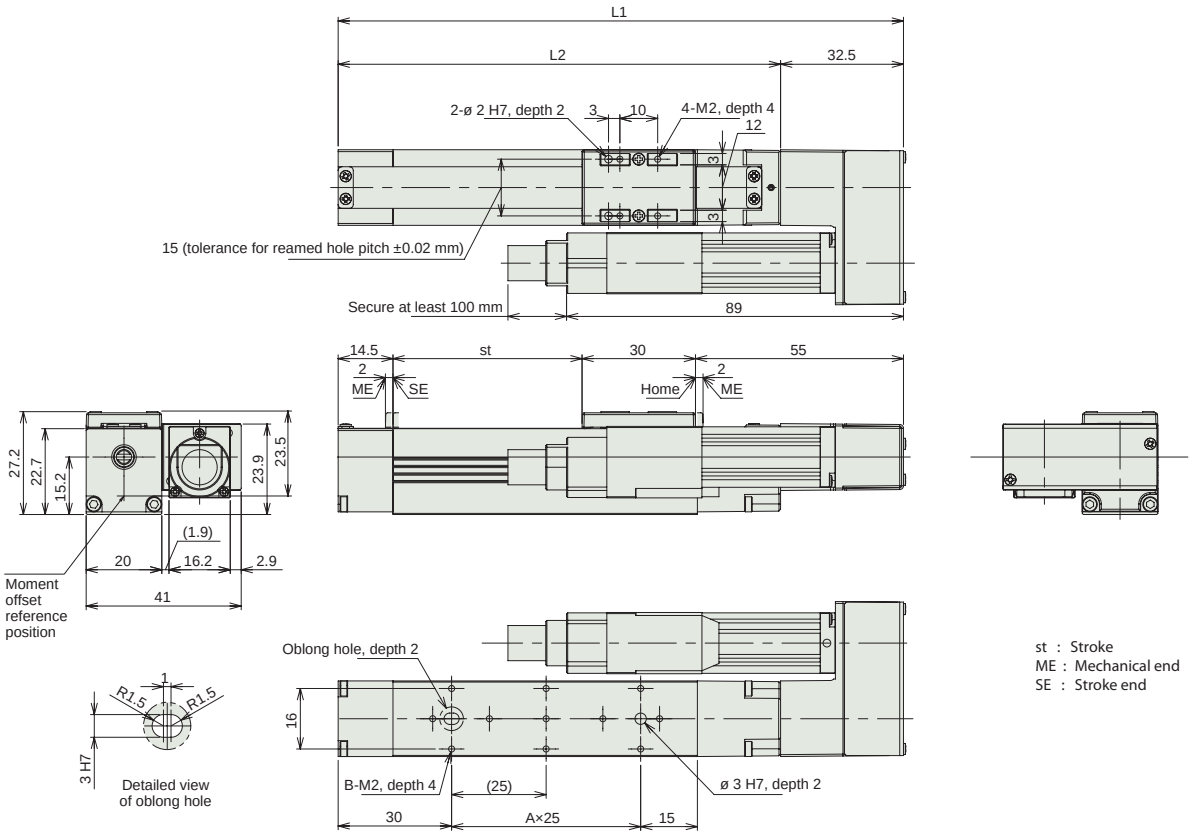

Dimensions and Weight by Stroke

Stroke	25	50	75	100
L1	124.5	149.5	174.5	199.5
L2	92	117	142	167
A	1	2	3	4
B	4	6	8	10
Mass (kg)	0.23	0.25	0.26	0.28

Compatible Controllers

RCA2 series actuators can be operated with the controllers indicated below. Select the type according to your intended application.

Title	External View	Model	Features	Maximum number of positioning points	Input power	Power-supply capacity		Reference Page
Solenoid valve type		ASEP-C-5SI-NP-2-0	Simple controller capable of operating with the same signal as the solenoid valve. Supports the use of both the single solenoid and the double solenoid types. Simple Absolute type makes the return to home unnecessary.	3 points	DC24V	(Standard) 1.5A rated 2.5A max.		→P123
Dust-proof solenoid valve type		PSEP-CW-5SI-NP-2-0						

RCA2-RA2AC

RoboCylinder Mini Rod Type Motor Unit Coupling Type Actuator Width 18 mm 24 V Servo Motor Ball Screw Specification

■Model Description

RCA2 – RA2AC – I – 5 – □ – □ – □ – □ – □

Series	Type	Encoder type	Motor type	Lead	Stroke	Compatible Controllers	Cable Length	Option
		I: Incremental specification * Model number is "I" when used with simple absolute unit.	5: Servo Motor 5W	4: 4mm 2: 2mm 1: 1mm	25: 25mm ~ 100: 100mm (every 25mm)	A3: ASEP	N: None P: 1m S: 3m M: 5m X□□: Length Designation	Following options Refer to below table

*See page 13 for details on the model descriptions.

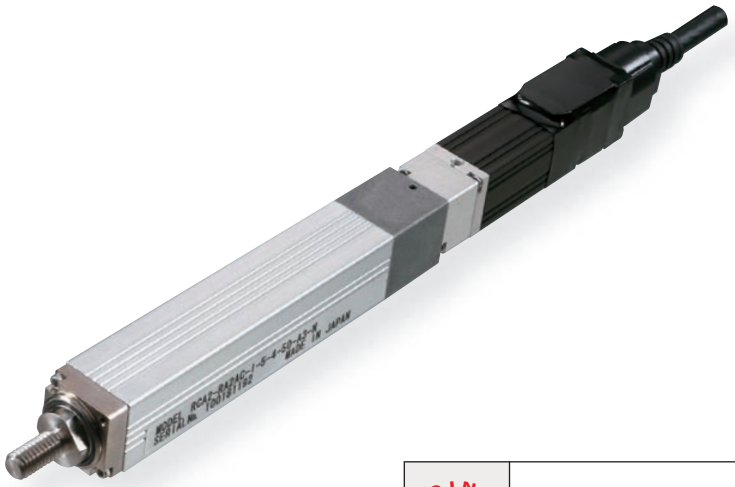

POINT Notes on selection

(1) The payload is the value when operated at 0.3G acceleration.
The acceleration upper limit is the value indicated above.

(2) Take note that, since there is no brake, the slider may come down when the power is turned off if the actuator is used vertically.

Actuator Specification Table

■Leads and Payloads

Model	Feed screw	Lead (mm)	Maximum payload Horizontal (kg)	Maximum payload Vertical (kg)	Positioning Repeatability (mm)	Stroke (mm)
RCA2-RA2AC-I-5-4-①-A3-②-③	Ball screw	4	0.5	0.25	±0.02	25 to 100 (every 25mm)
RCA2-RA2AC-I-5-2-①-A3-②-③		2	1	0.5		
RCA2-RA2AC-I-5-1-①-A3-②-③		1	2	1		

Legend ① Stroke ② Cable length ③ Option

■Stroke and Maximum Speed

Lead	Stroke	25 (mm)	50 to 100 (mm)
Ball screw	4	180	200
	2	100	
	1	50	

(Unit = mm/s)

Cable length

Type	Cable symbol	
Standard type (Robot cable)	**P** (1m)	
	S (3m)	
	M (5m)	
Special length	**X06** (6m) to **X10** (10m)	
	X11 (11m) to **X15** (15m)	
	X16 (16m) to **X20** (20m)	

* The standard cable for the RCA2 is the robot cable.

Actuator Specification

Item	Description
Drive System	Ball screw, φ4mm, rolled C10
Lost Motion	0.1mm or less
Base	Material: Aluminum, white alumite treated
Non-rotating accuracy of rod	±3.0 deg
Ambient Operating Temp., Humidity	0 to 40 ˚C, 85% RH or less (No condensation)
Service life	5000km

Options

Title	Option code	See page	
Reversed-home specification	**NM**	–	

Dimensional Drawings

CAD drawings can be downloaded from the website. www.robocylinder.de

2/3D CAD

*1 Connect the motor and encoder cables.
*2 During home return, be careful to avoid interference from peripheral objects because the slider travels until the mechanical end.
*3 The direction of the surface across flats varies depending on the product.

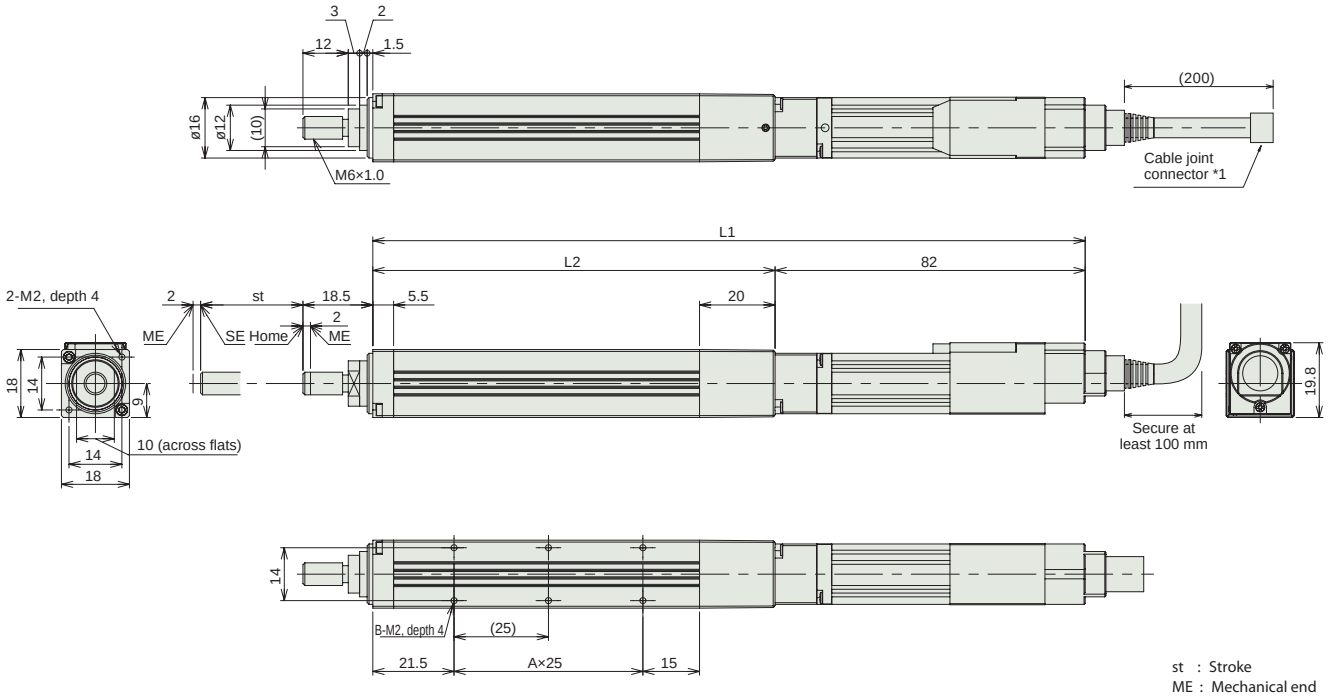

st : Stroke
ME : Mechanical end
SE : Stroke end

Dimensions and Weight by Stroke

Stroke	25	50	75	100
L1	163.5	188.5	213.5	238.5
L2	81.5	106.5	131.5	156.5
A	1	2	3	4
B	4	6	8	10
Mass (kg)	0.17	0.19	0.2	0.22

Compatible Controllers

RCA2 series actuators can be operated with the controllers indicated below. Select the type according to your intended application.

Title	External View	Model	Features	Maximum number of positioning points	Input power	Power-supply capacity		Reference Page
Solenoid valve type		ASEP-C-5SI-NP-2-0	Simple controller capable of operating with the same signal as the solenoid valve. Supports the use of both the single solenoid and the double solenoid types. Simple Absolute type makes the return to home unnecessary.	3 points	DC24V	(Standard) 1.5A rated 2.5A max.		→P123
Dust-proof solenoid valve type		PSEP-CW-5SI-NP-2-0						

RCA2-RA2AR

RoboCylinder Mini Rod Type Motor Unit Reverse-mounted Type Actuator Width 18 mm 24 V Servo Motor Ball Screw Specification

■Model Description

RCA2 – RA2AR – I – 5 – □ – □ – □ – □ – □

Series	Type	Encoder type	Motor type	Lead	Stroke	Compatible Controllers	Cable Length	Option
		I: Incremental specification * Model number is "I" when used with simple absolute unit.	5: Servo Motor 5W	4: 4mm 2: 2mm 1: 1mm	25: 25mm ~ 100: 100mm (every 25mm)	A3: ASEP	N: None P: 1m S: 3m M: 5m X□□: Length Designation	Following options Refer to below table * Be sure to specify which side the motor is to be mounted (ML/MR/MT)

*See page 13 for details on the model descriptions.

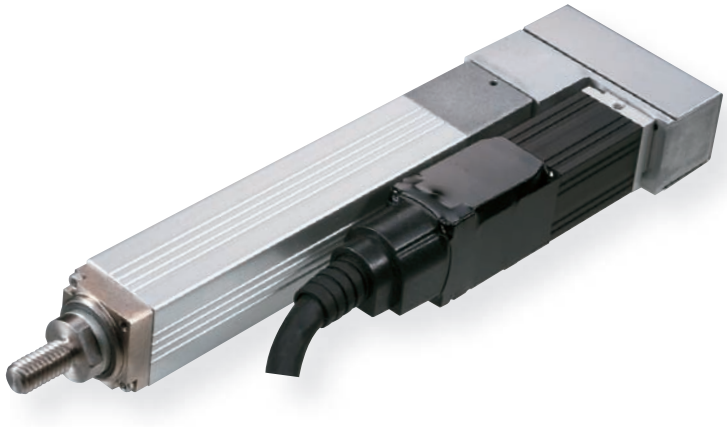

POINT Notes on selection

(1) The payload is the value when operated at 0.3G acceleration. The acceleration upper limit is the value indicated above.

(2) Take note that, since there is no brake, the slider may come down when the power is turned off if the actuator is used vertically.

Actuator Specification Table

■Leads and Payloads

Model	Feed screw	Lead (mm)	Maximum payload Horizontal (kg)	Maximum payload Vertical (kg)	Positioning Repeatability (mm)	Stroke (mm)
RCA2-RA2AR-I-5-4-①-A3-②-③	Ball screw	4	0.5	0.25	±0.02	25 to 100 (every 25mm)
RCA2-RA2AR-I-5-2-①-A3-②-③		2	1	0.5		
RCA2-RA2AR-I-5-1-①-A3-②-③		1	2	1		

Legend ① Stroke ② Cable length ③ Option

■Stroke and Maximum Speed

Lead	Stroke	25 (mm)	50 to 100 (mm)
Ball screw	4	180	200
	2	100	
	1	50	

(Unit = mm/s)

Cable length

Type	Cable symbol	
Standard type (Robot cable)	**P** (1m)	
	S (3m)	
	M (5m)	
Special length	**X06** (6m) to **X10** (10m)	
	X11 (11m) to **X15** (15m)	
	X16 (16m) to **X20** (20m)	

* The standard cable for the RCA2 is the robot cable.

Actuator Specification

Item	Description
Drive System	Ball screw, φ4mm, rolled C10
Lost Motion	0.1mm or less
Base	Material: Aluminum, white alumite treated
Non-rotating accuracy of rod	±3.0 deg
Ambient Operating Temp., Humidity	0 to 40 ˚C, 85% RH or less (No condensation)
Service life	5000km

Options

Title	Option code	See page	
Reversed-home specification	**NM**	–	
Motor side mounted to the right	**MR**	–	
Motor side mounted to the left	**ML**	–	
Motor side mounted to the top	**MT**	–	

Dimensional Drawings

CAD drawings can be downloaded from the website. www.robocylinder.de

2/3D CAD

*1 Connect the motor and encoder cables.
*2 During home return, be careful to avoid interference from peripheral objects because the slider travels until the mechanical end.
*3 The direction of the surface across flats varies depending on the product.

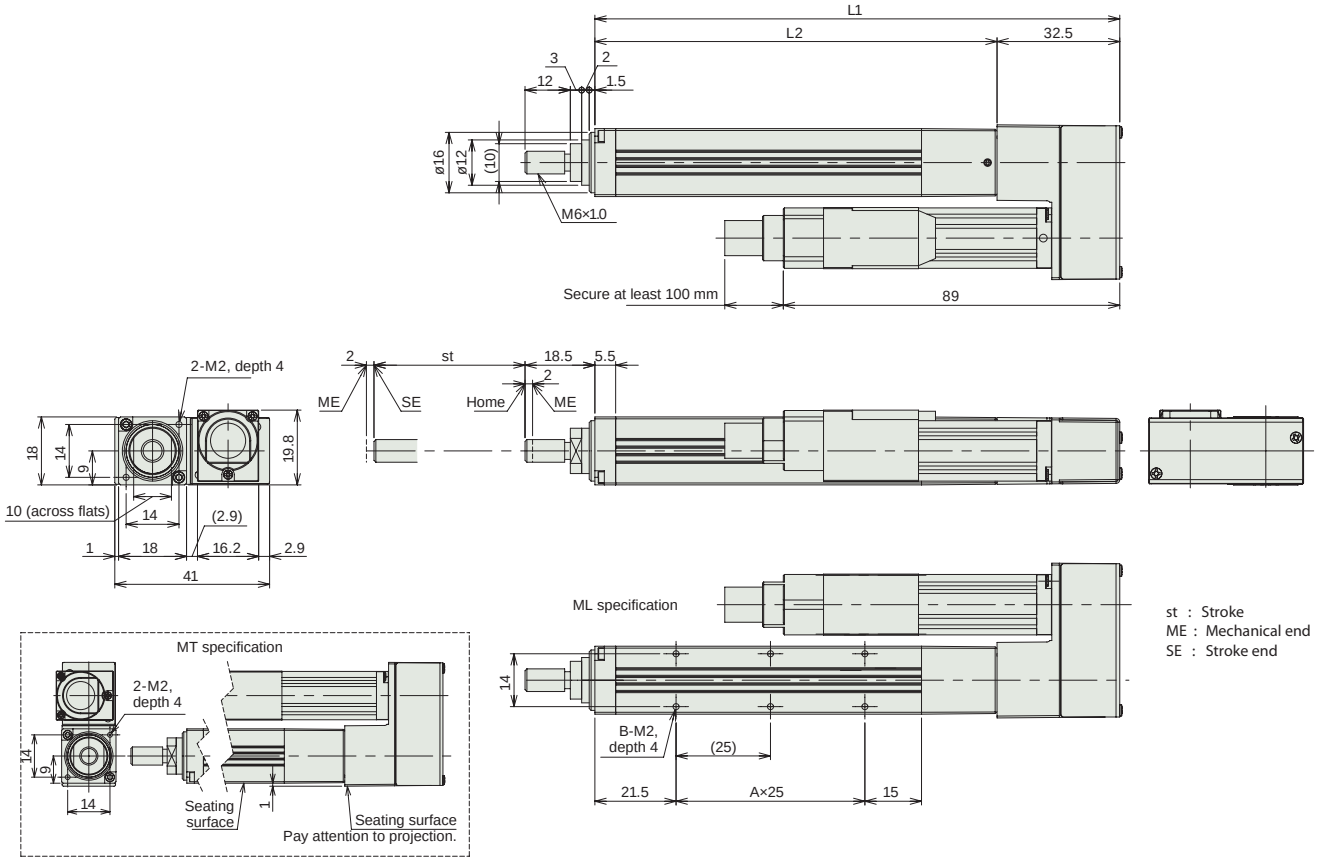

Dimensions and Weight by Stroke

Stroke	25	50	75	100
L1	114	139	164	189
L2	81.5	106.5	131.5	156.5
A	1	2	3	4
B	4	6	8	10
Mass (kg)	0.21	0.22	0.24	0.25

Compatible Controllers

RCA2 series actuators can be operated with the controllers indicated below. Select the type according to your intended application.

Title	External View	Model	Features	Maximum number of positioning points	Input power	Power-supply capacity		Reference Page
Solenoid valve type		ASEP-C-5SI-NP-2-0	Simple controller capable of operating with the same signal as the solenoid valve. Supports the use of both the single solenoid and the double solenoid types. Simple Absolute type makes the return to home unnecessary.	3 points	DC24V	(Standard) 1.5A rated 2.5A max.		→P123
Dust-proof solenoid valve type		PSEP-CW-5SI-NP-2-0						

Slider Type
Mini
Standard
Controllers Integrated
Rod Type
Mini
Standard
Controllers Integrated
Table/Arm /Flat Type
Mini
Standard
Gripper/ Rotary Type
Linear Motor Type
Cleanroom Type
Splash Proof
Controllers
PMEC /AMEC
PSEP /ASEP
ROBO NET
ERC2
PCON
ACON
SCON
PSEL
ASEL
SSEL
XSEL
Pulse Motor
Servo Motor (24V)
Servo Motor (230V)
Linear Motor

RCA2-RN3NA

RoboCylinder Mini Rod Type Short-Length Nut-Mounting Type
28mm Width 24V Servo Motor Ball Screw/Lead Screw

■ Configuration: **RCA2** – **RN3NA** – **I** – **10** – □ – □ – □ – □ – □ – □

Series	Type	Encoder	Motor	Lead	Stroke	Compatible Controllers	Cable Length	Option
		I: Incremental * The Simple absolute encoder is also considered type "I".	10 : 10W Servo Motor	4: Ball screw 4mm 2: Ball screw 2mm 1: Ball screw 1mm 4S: lead screw 4mm 2S: lead screw 2mm 1S: lead screw 1mm	30:30mm 50:50mm	A1 : ACON RACON ASEL A3 : AMEC ASEP	N : None P : 1m S : 3m M : 5m X □□ : Custom Length	K1~3 : Connector cable exit direction LA : Power-saving

* See page Pre-35 for an explanation of the naming convention.

Power-saving

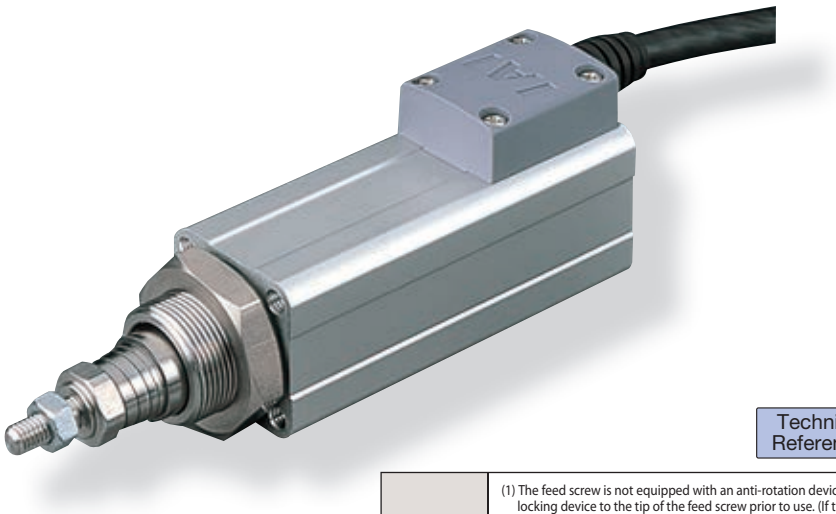

Technical References P. A-5

POINT Notes on Selection

(1) The feed screw is not equipped with an anti-rotation device, so please attach a guide or similar locking device to the tip of the feed screw prior to use. (If there is no antirotation device attached, the lead screw cannot extend or retract.)
(2) The horizontal payload is the value when used in combination with an external guide.
(3) The payload is the value when the actuator is operated at an acceleration of 0.3 G (0.2G for lead 1, if used vertically and for lead screw specification). The acceleration limit is the value indicated above.
(4) Do not apply an external force on the rod in any direction other than the direction the rod is moving in.
(5) If the actuator is used vertically, pay attention to rod contact because the rod will come down when the power is turned off.

Actuator Specifications

■Lead and Load Capacity

Model	Motor output (W)	Feed screw	Lead (mm)	Maximum payload Horizontal (kg)	Maximum payload Vertical (kg)	Rated thrust (N)	Positioning Repeatability (mm)	Stroke (mm)
RCA2-RN3NA-I-10-4-①-②-③-④	10	Ball screw	4	0.75	0.25	42.7	±0.02	30 50
RCA2-RN3NA-I-10-2-①-②-③-④			2	1.5	0.5	85.5		
RCA2-RN3NA-I-10-1-①-②-③-④			1	3	1	170.9		
RCA2-RN3NA-I-10-4S-①-②-③-④	10	Lead screw	4	0.25	0.125	25.1	±0.05	30 50
RCA2-RN3NA-I-10-2S-①-②-③-④			2	0.5	0.25	50.3		
RCA2-RN3NA-I-10-1S-①-②-③-④			1	1	0.5	100.5		

Legend ① Stroke ② Compatible Controllers ③ Cable length ④ Option

■Stroke and Maximum Speed

	Lead \ Stroke	30 (mm)	50 (mm)
Ball screw	4	200	
	2	100	
	1	50	
Lead screw	4	200	
	2	100	
	1	50	

(Unit = mm/s)

Cable List

Type	Cable Symbol	
Standard (Robot Cables)	**P** (1m)	
	S (3m)	
	M (5m)	
Special Lengths	**X06** (6m) ~ **X10** (10m)	
	X11 (11m) ~ **X15** (15m)	
	X16 (16m) ~ **X20** (20m)	

* The RCA2 comes standard with a robot cable.
* See page A-39 for cables for maintenance.

Actuator Specifications

Item		Description
Drive System		Ball screw/Lead screw, Ø4 mm, rolled C10
Lost motion		Ball screw: 0.1 mm or less/Lead screw: 0.3 mm or less (default value)
Frame		Material: Aluminum, white alumite treated
Ambient operating temperature, humidity		0 to 40 ˚C, 85% RH or less (Non-condensing)
Service life	Lead screw specification	Horizontal specification: 10 million cycles, Vertical specification: 5 million cycles
	Ball screw specification	5000 km

Option List

Name	Option Code	See Page	
Cable exit from left	**K1**	→ A-32	
Cable exit from front	**K2**	→ A-32	
Cable exit from right	**K3**	→ A-32	
Power-saving	**LA**	→ A-32	

Dimensions

CAD drawings can be downloaded from IAI website. www.robocylinder.de

For Special Orders P. A-9

2/3D CAD

*1 A motor-encoder cable is connected here. See page A-39 for details on cables.
*2 When homing, the rod moves to the mechanical end; therefore, please watch for any interference with the surrounding objects.
*3 The orientation of the bolt will vary depending on the product.

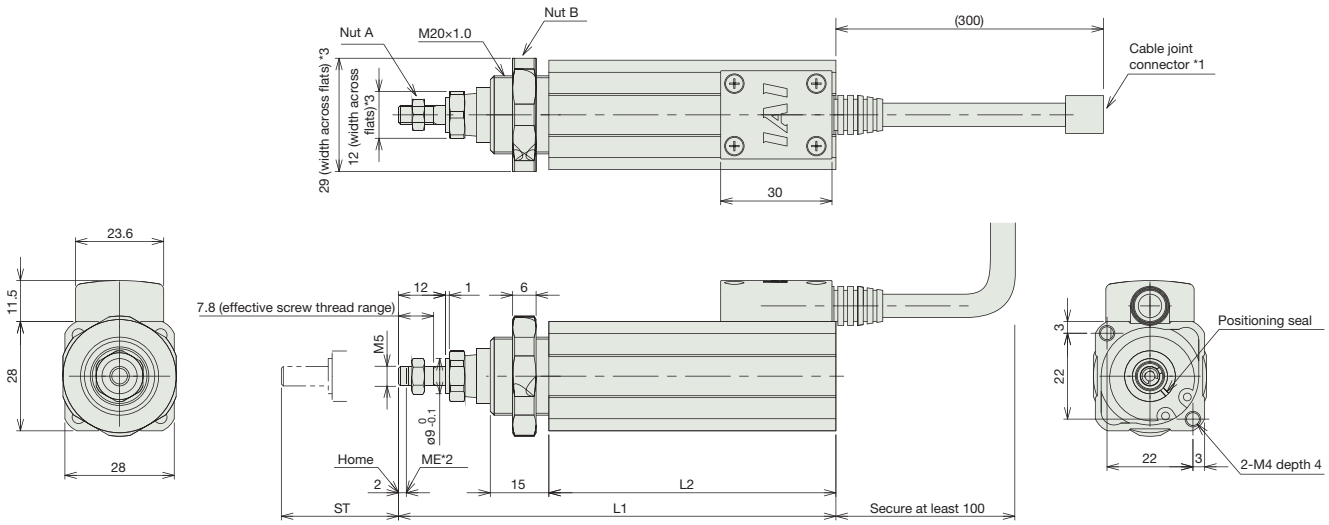

ME: Mechanical end

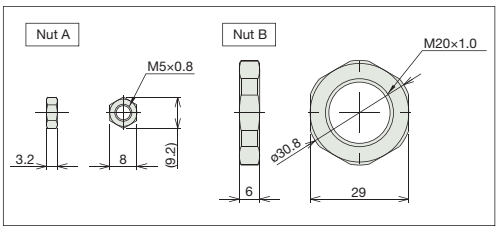

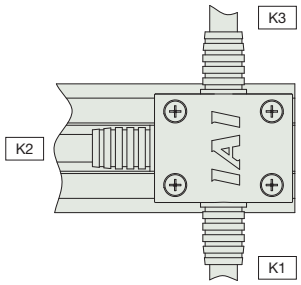

Connector cable exit direction

Dimensions and Weight by Stroke

Stroke	30	50
L1	112	132
L2	73.5	93.5
Weight (kg)	0.25	0.27

Compatible Controllers

The RCA2 series actuators can operate with the controllers below. Select the controller according to your usage.

Name	External View	Model	Description	Max. Positioning Points	Input Voltage	Power Supply Capacity		See Page
Solenoid Valve Type		AMEC-C-10I①-NP-2-2	Easy-to-use controller, even for beginners	3 points	AC115V / AC230V* *planned	2.4A rated		→ P477
Solenoid Valve Type		ASEP-C-10I①-NP-2-0	Operable with same signal as solenoid valve. Supports both single and double solenoid types. No homing necessary with simple absolute type.		DC24V	(Standard) 1.3A rated 4.4A max. (Power-saving) 1.3A rated 2.5A max.		→ P487
Splash-Proof Solenoid Valve Type		ASEP-CW-10I①-NP-2-0						
Positioner Type		ACON-C-10I①-NP-2-0	Positioning is possible for up to 512 points	512 points				→ P535
Safety-Compliant Positioner Type		ACON-CG-10I①-NP-2-0						
Pulse Train Input Type (Differen tial Line Driver)		ACON-PL-10I①-NP-2-0	Pulse train input type with differential line driver support	(–)				
Pulse Train Input Type (Open Collector)		ACON-PO-10I①-NP-2-0	Pulse train input type with open collector support					
Serial Communication Type		ACON-SE-10I①-N-0-0	Dedicated to serial communication	64 points				
Field Network Type		RACON-10①	Dedicated to field network	768 points				→ P503
Program Control Type		ASEL-C-1-10I①-NP-2-0	Programmed operation is possible Operation is possible on up to 2 axes	1500 points				→ P567

* This is for the single-axis ASEL.
* ① is a placeholder for the code "LA" if the power-saving option is specified.

Slider Type
Mini
Standard
Controllers Integrated
Rod Type
Mini
Standard
Controllers Integrated
Table/Arm /Flat Type
Mini
Standard
Gripper/ Rotary Type
Linear Motor Type
Cleanroom Type
Splash Proof
Controllers
PMEC /AMEC
PSEP /ASEP
ROBO NET
ERC2
PCON
ACON
SCON
PSEL
ASEL
SSEL
XSEL
Pulse Motor
Servo Motor (24V)
Servo Motor (230V)
Linear Motor

RCA2-RN4NA

RoboCylinder Mini Rod Type Short-Length Nut-Mounting Type 34mm Width
24V Servo Motor Ball Screw/Lead Screw

■ Configuration: **RCA2** – **RN4NA** – **I** – **20** – ☐ – ☐ – ☐ – ☐ – ☐ – ☐

Series	Type	Encoder	Motor	Lead	Stroke	Compatible Controllers	Cable Length	Option
		I: Incremental * The Simple absolute encoder is also considered type "I".	20 : 20W Servo Motor	6 : 6mm ball screw 4 : 4mm ball screw 2 : 2mm ball screw 6S : 6mm lead screw 4S : 4mm lead screw 2S : 2mm lead screw	30 : 30mm 50 : 50mm	A1 : ACON RACON ASEL A3 : AMEC ASEP	N : None P : 1m S : 3m M : 5m X ☐☐ : Custom Length	K1~3 : Connector cable exit direction LA : Power-saving

* See page Pre-35 for an explanation of the naming convention.

Power-saving

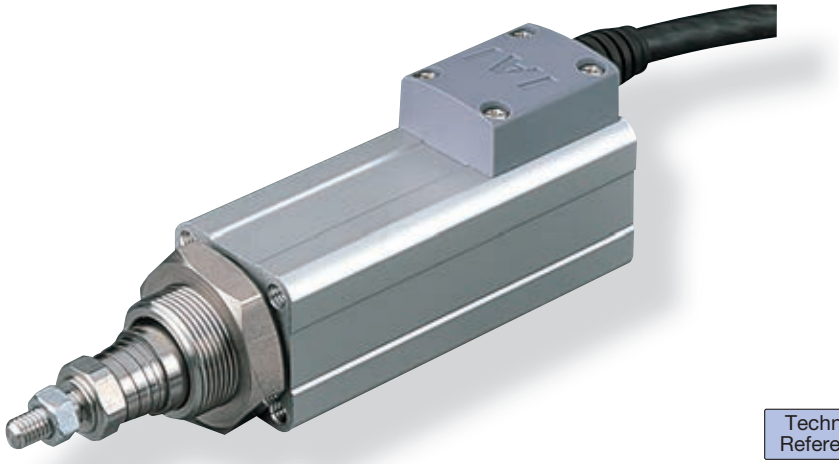

Technical References P. A-5

POINT Notes on Selection

(1) The feed screw is not equipped with an anti-rotation device, so please attach a guide or similar locking device to the tip of the feed screw prior to use. (If there is no antirotation device attached, the lead screw cannot extend or retract.)
(2) The horizontal payload is the value when used in combination with an external guide.
(3) The payload is the value when the actuator is operated at an acceleration of 0.3 G (0.2G for lead 2, if used vertically and for lead screw specification). The acceleration limit is the value indicated above.
(4) Do not apply an external force on the rod in any direction other than the direction the rod is moving in.
(5) If the actuator is used vertically, pay attention to rod contact because the rod will come down when the power is turned off.

Actuator Specifications

■ Lead and Load Capacity

Model	Motor Output (W)	Feed Screw	Lead (mm)	Max. Load Capacity Horizontal (kg)	Max. Load Capacity Vertical (kg)	Rated Thrust (N)	Positioning Repeatability (mm)	Stroke (mm)
RCA2-RN4NA-I-20-6- ① - ② - ③	20	Ball Screw	6	2	0.5	33.8	±0.02	30 50
RCA2-RN4NA-I-20-4- ① - ② - ③			4	3	0.75	50.7		
RCA2-RN4NA-I-20-2- ① - ② - ③			2	6	1.5	101.5		
RCA2-RN4NA-I-20-6S- ① - ② - ③	20	Lead Screw	6	0.25	0.125	19.9	±0.05	30 50
RCA2-RN4NA-I-20-4S- ① - ② - ③			4	0.5	0.25	29.8		
RCA2-RN4NA-I-20-2S- ① - ② - ③			2	1	0.5	59.7		

Legend ① Compatible controller ② Cable length ③ Options

■ Stroke and Maximum Speed

	Lead \ Stroke	30 (mm)	50 (mm)
Ball Screw	6	270 <220>	300
	4	200	
	2	100	
Lead Screw	6	220	300
	4	200	
	2	100	

* The values enclosed in < > apply for vertical usage. (Unit: mm/s)

Cable List

Type	Cable Symbol	
Standard (Robot Cables)	**P** (1m)	
	S (3m)	
	M (5m)	
Special Lengths	**X06** (6m) ~ **X10** (10m)	
	X11 (11m) ~ **X15** (15m)	
	X16 (16m) ~ **X20** (20m)	

* The RCA2 comes standard with a robot cable.
* See page A-39 for cables for maintenance.

Actuator Specifications

Item		Description
Drive System		Ball screw/Lead screw, Ø6 mm, rolled C10
Lost motion		Ball screw: 0.1 mm or less/Lead screw: 0.3 mm or less (default value)
Frame		Material: Aluminum, white alumite treated
Ambient operating temperature, humidity		0 to 40 °C, 85% RH or less (Non-condensing)
Service life	Lead screw specification	Horizontal specification: 10 million cycles, Vertical specification: 5 million cycles
	Ball screw specification	5000 km

Option List

Name	Option Code	See Page	
Cable exit from left	**K1**	→ A-32	
Cable exit from front	**K2**	→ A-32	
Cable exit from right	**K3**	→ A-32	
Power-saving	**LA**	→ A-32	

Dimensions

CAD drawings can be downloaded from IAI website. www.robocylinder.de

For Special Orders P. A-9

2/3D CAD

*1 A motor-encoder cable is connected here. See page A-39 for details on cables.
*2 When homing, the rod moves to the mechanical end; therefore, please watch for any interference with the surrounding objects.
*3 The orientation of the bolt will vary depending on the product.

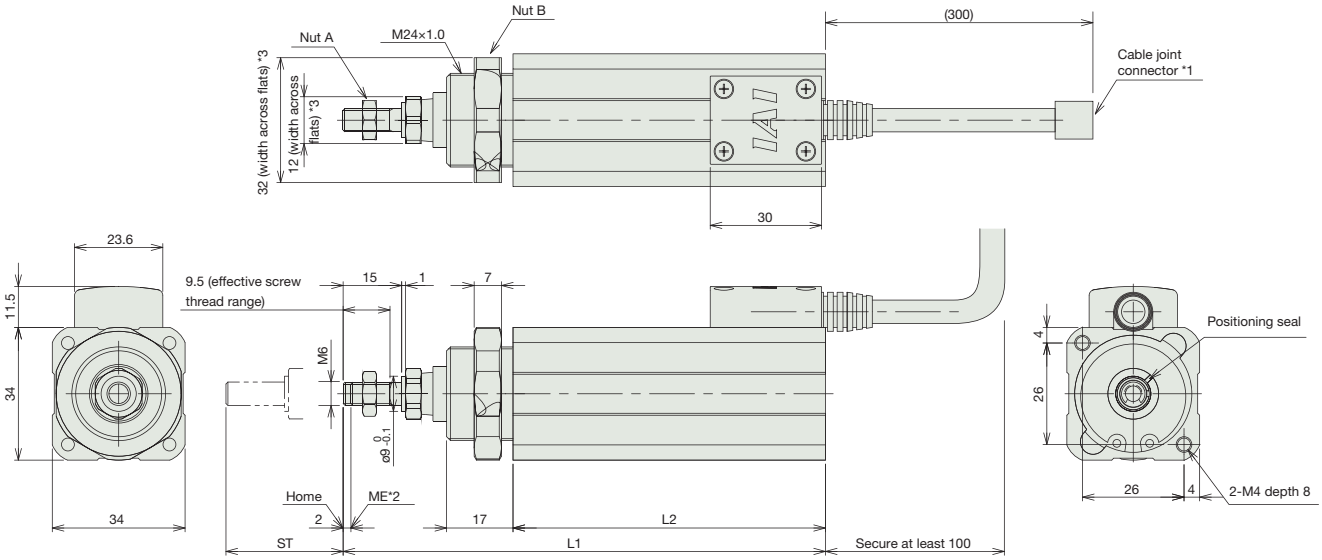

ME: Mechanical end

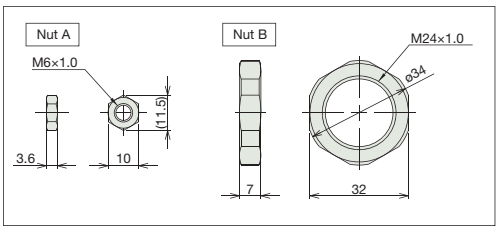

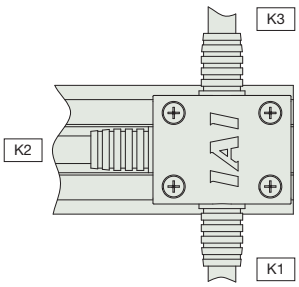

Connector cable exit direction

Dimensions and Weight by Stroke

Stroke	30	50
L1	123.5	143.5
L2	80	100
Weight (kg)	0.40	0.44

Compatible Controllers

The RCA2 series actuators can operate with the controllers below. Select the controller according to your usage.

Name	External View	Model	Description	Max. Positioning Points	Input Voltage	Power Supply Capacity		See Page
Solenoid Valve Type		AMEC-C-20I①-NP-2-2	Easy-to-use controller, even for beginners	3 points	AC115V / AC230V* *planned	2.4A rated		→ P477
		ASEP-C-20I①-NP-2-0	Operable with same signal as solenoid valve. Supports both single and double solenoid types. No homing necessary with simple absolute type.		DC24V	(Standard) 1.3A rated 4.4A max. (Power-saving) 1.3A rated 2.5A max.		→ P487
Splash-Proof Solenoid Valve Type		ASEP-CW-20I①-NP-2-0						
Positioner Type		ACON-C-20I①-NP-2-0	Positioning is possible for up to 512 points	512 points				→ P535
Safety-Compliant Positioner Type		ACON-CG-20I①-NP-2-0						
Pulse Train Input Type (Differen tial Line Driver)		ACON-PL-20I①-NP-2-0	Pulse train input type with differential line driver support	(–)				
Pulse Train Input Type (Open Collector)		ACON-PO-20I①-NP-2-0	Pulse train input type with open collector support					
Serial Communication Type		ACON-SE-20I①-N-0-0	Dedicated to serial communication	64 points				
Field Network Type		RACON-20①	Dedicated to field network	768 points				→ P503
Program Control Type		ASEL-C-1-20I①-NP-2-0	Programmed operation is possible Operation is possible on up to 2 axes	1500 points				→ P567

* This is for the single-axis ASEL.
* ① is a placeholder for the code "LA" if the power-saving option is specified.

Slider Type
Mini
Standard
Controllers Integrated
Rod Type
Mini
Standard
Controllers Integrated
Table/Arm /Flat Type
Mini
Standard
Gripper/ Rotary Type
Linear Motor Type
Cleanroom Type
Splash Proof
Controllers
PMEC /AMEC
PSEP /ASEP
ROBO NET
ERC2
PCON
ACON
SCON
PSEL
ASEL
SSEL
XSEL
Pulse Motor
Servo Motor (24V)
Servo Motor (230V)
Linear Motor

RCA2-RP3NA

RoboCylinder Mini Rod Type Short-Length Tapped-Hole Mounting Type 28mm Width
24V Servo Motor Ball screw/Lead Screw

■ Configuration: **RCA2** – **RP3NA** – **I** – **10** – ☐ – ☐ – ☐ – ☐ – ☐ – ☐

Series	Type	Encoder	Motor	Lead	Stroke	Compatible Controllers	Cable Length	Option
		I: Incremental * The Simple absolute encoder is also considered type "I".	10 : 10W Servo Motor	4 : Ball screw 4mm 2 : Ball screw 2mm 1 : Ball screw 1mm 4S : Lead screw 4mm 2S : Lead screw 2mm 1S : Lead screw 1mm	30 : 30mm 50 : 50mm	A1 : ACON RACON ASEL A3 : AMEC ASEP	N : None P : 1m S : 3m M : 5m X ☐☐ : Custom Length	K1~3 : Connector cable exit direction LA : Power-saving

* See page Pre-35 for an explanation of the naming convention.

Power-saving

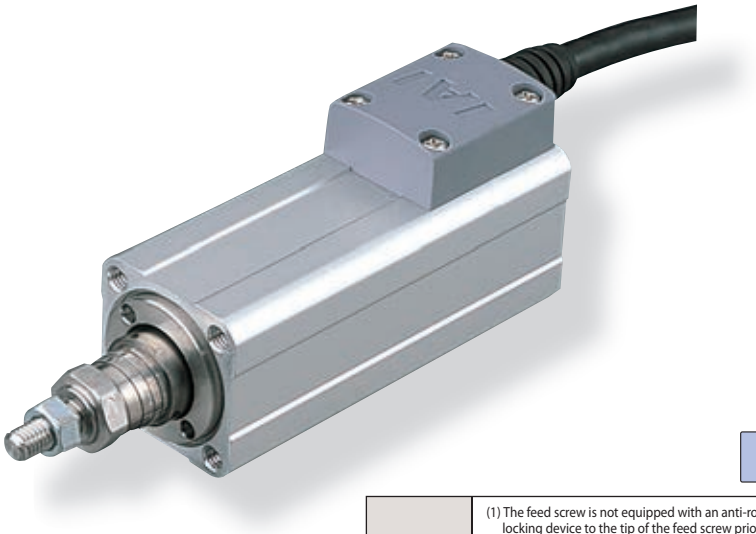

Technical References P. A-5

POINT Notes on Selection

(1) The feed screw is not equipped with an anti-rotation device, so please attach a guide or similar locking device to the tip of the feed screw prior to use. (If there is no antirotation device attached, the lead screw cannot extend or retract.)
(2) The horizontal payload is the value when used in combination with an external guide.
(3) The payload is the value when the actuator is operated at an acceleration of 0.3 G (0.2G for lead 1, if used vertically and for lead screw specification). The acceleration limit is the value indicated above.
(4) Do not apply an external force on the rod in any direction other than the direction the rod is moving in.
(5) If the actuator is used vertically, pay attention to rod contact because the rod will come down when the power is turned off.

Actuator Specifications

■Lead and Load Capacity

Model	Motor output (W)	Feed screw	Lead (mm)	Maximum payload Horizontal (kg)	Maximum payload Vertical (kg)	Rated thrust (N)	Positioning Repeatability (mm)	Stroke (mm)
RCA2-RP3NA-I-10-4-①-②-③-④	10	Ball screw	4	0.75	0.25	42.7	±0.02	30 50
RCA2-RP3NA-I-10-2-①-②-③-④			2	1.5	0.5	85.5		
RCA2-RP3NA-I-10-1-①-②-③-④			1	3	1	170.9		
RCA2-RP3NA-I-10-4S-①-②-③-④	10	Lead screw	4	0.25	0.125	25.1	±0.05	30 50
RCA2-RP3NA-I-10-2S-①-②-③-④			2	0.5	0.25	50.3		
RCA2-RP3NA-I-10-1S-①-②-③-④			1	1	0.5	100.5		

Legend ① Stroke ② Compatible Controllers ③ Cable length ④ Option

■Stroke and Maximum Speed

	Lead \ Stroke	30 (mm)	50 (mm)
Ball screw	4	200	
	2	100	
	1	50	
Lead screw	4	200	
	2	100	
	1	50	

(Unit = mm/s)

Cable List

Type	Cable Symbol	
Standard (Robot Cables)	**P** (1m)	
	S (3m)	
	M (5m)	
Special Lengths	**X06** (6m) ~ **X10** (10m)	
	X11 (11m) ~ **X15** (15m)	
	X16 (16m) ~ **X20** (20m)	

* The RCA2 comes standard with a robot cable.
* See page A-39 for cables for maintenance.

Actuator Specifications

Item		Description
Drive System		Ball screw/Lead screw, Ø4 mm, rolled C10
Lost motion		Ball screw: 0.1 mm or less/Lead screw: 0.3 mm or less (default value)
Frame		Material: Aluminum, white alumite treated
Ambient operating temperature, humidity		0 to 40 ˚C, 85% RH or less (Non-condensing)
Service life	Lead screw specification	Horizontal specification: 10 million cycles, Vertical specification: 5 million cycles
	Ball screw specification	5000 km

Option List

Name	Option Code	See Page	
Cable exit from left	**K1**	→ A-32	
Cable exit from front	**K2**	→ A-32	
Cable exit from right	**K3**	→ A-32	
Power-saving	**LA**	→ A-32	

Dimensions

CAD drawings can be downloaded from IAI website. www.robocylinder.de

For Special Orders P. A-9

2/3D CAD

*1 A motor-encoder cable is connected here. See page A-39 for details on cables.
*2 When homing, the rod moves to the mechanical end; therefore, please watch for any interference with the surrounding objects.
*3 The orientation of the bolt will vary depending on the product.

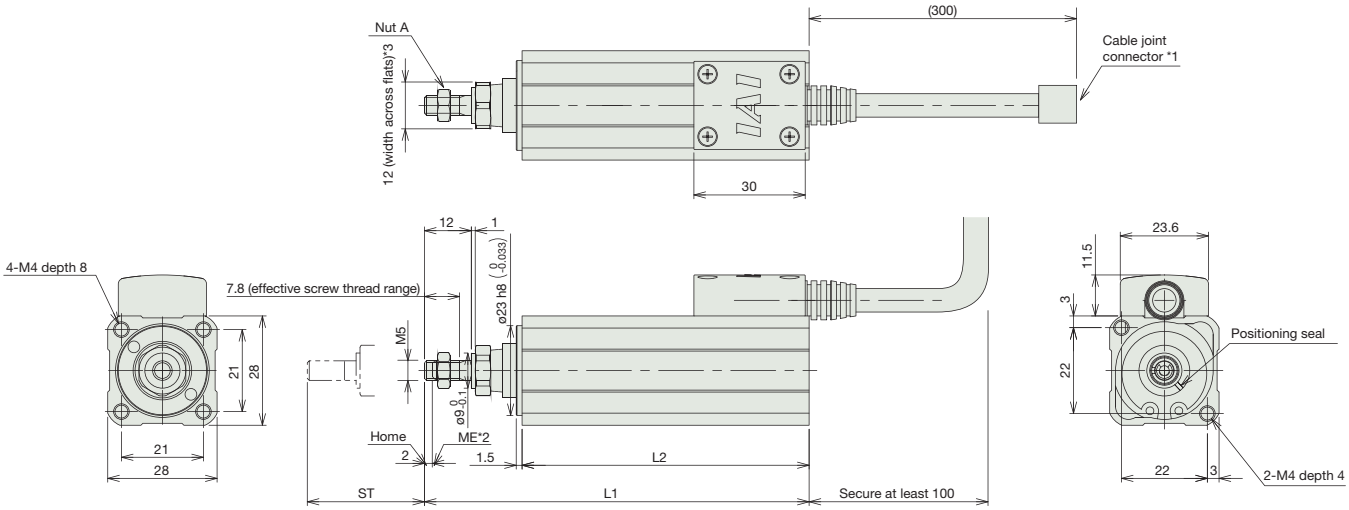

ME: Mechanical end

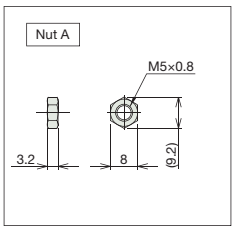

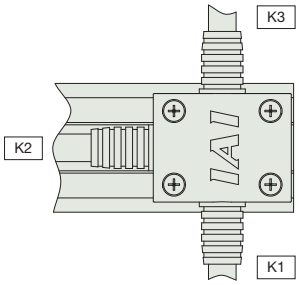

Connector cable exit direction

Dimensions/Weight by Stroke

Stroke	30	50
L1	98.5	118.5
L2	73.5	93.5
Weight (kg)	0.20	0.22

Compatible Controllers

The RCA2 series actuators can operate with the controllers below. Select the controller according to your usage.

Name	External View	Model	Description	Max. Positioning Points	Input Voltage	Power Supply Capacity		See Page
Solenoid Valve Type		AMEC-C-10I①-NP-2-2	Easy-to-use controller, even for beginners	3 points	AC115V / AC230V* *planned	2.4A rated		→ P477
		ASEP-C-10I①-NP-2-0	Operable with same signal as solenoid valve. Supports both single and double solenoid types. No homing necessary with simple absolute type.		DC24V	(Standard) 1.3A rated 4.4A max. (Power-saving) 1.3A rated 2.5A max.		→ P487
Splash-Proof Solenoid Valve Type		ASEP-CW-10I①-NP-2-0						
Positioner Type		ACON-C-10I①-NP-2-0	Positioning is possible for up to 512 points	512 points				→ P535
Safety-Compliant Positioner Type		ACON-CG-10I①-NP-2-0						
Pulse Train Input Type (Differen tial Line Driver)		ACON-PL-10I①-NP-2-0	Pulse train input type with differential line driver support	(–)				
Pulse Train Input Type (Open Collector)		ACON-PO-10I①-NP-2-0	Pulse train input type with open collector support					
Serial Communication Type		ACON-SE-10I①-N-0-0	Dedicated to serial communication	64 points				
Field Network Type		RACON-10①	Dedicated to field network	768 points				→ P503
Program Control Type		ASEL-C-1-10I①-NP-2-0	Programmed operation is possible Operation is possible on up to 2 axes	1500 points				→ P567

* This is for the single-axis ASEL.
* ① is a placeholder for the code "LA" if the power-saving option is specified.

Slider Type
Mini
Standard
Controllers Integrated
Rod Type
Mini
Standard
Controllers Integrated
Table/Arm /Flat Type
Mini
Standard
Gripper/ Rotary Type
Linear Motor Type
Cleanroom Type
Splash Proof
Controllers
PMEC /AMEC
PSEP /ASEP
ROBO NET
ERC2
PCON
ACON
SCON
PSEL
ASEL
SSEL
XSEL
Pulse Motor
Servo Motor (24V)
Servo Motor (230V)
Linear Motor

RCA2-RP4NA

RoboCylinder Mini Rod Type Short-Length Tapped-Hole Mounting Type
34mm Width 24V Servo Motor Ball Screw/Lead Screw

■ Configuration: **RCA2** – **RP4NA** – **I** – **20** – ☐ – ☐ – ☐ – ☐ – ☐ – ☐

Series	Type	Encoder	Motor	Lead	Stroke	Compatible Controllers	Cable Length	Option
		I: Incremental * The Simple absolute encoder is also considered type "I".	20 : 20W Servo Motor	6 : 6mm ball screw 4 : 4mm ball screw 2 : 2mm ball screw 6S : 6mm lead screw 4S : 4mm lead screw 2S : 2mm lead screw	30 : 30mm 50 : 50mm	A1 : ACON RACON ASEL A3 : AMEC ASEP	N : None P : 1m S : 3m M : 5m X ☐☐ : Custom Length	K1~3 : Connector cable exit direction LA : Power-saving

* See page Pre-35 for an explanation of the naming convention.

Power-saving

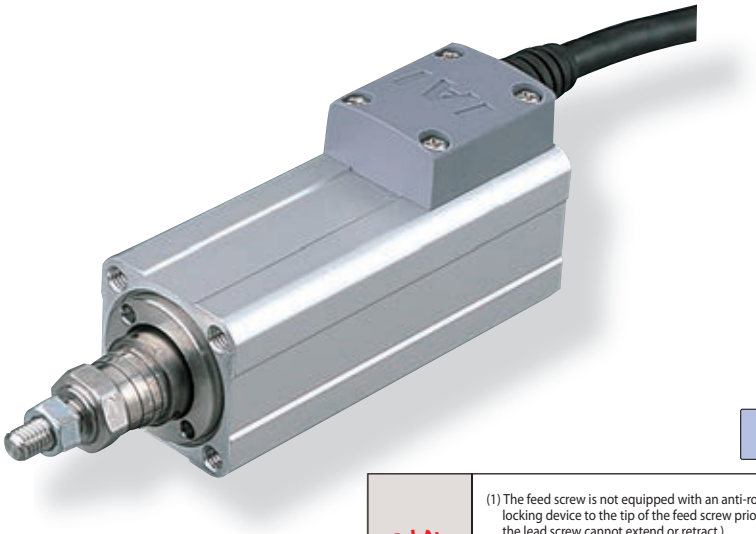

Technical References P. A-5

POINT Notes on Selection

(1) The feed screw is not equipped with an anti-rotation device, so please attach a guide or similar locking device to the tip of the feed screw prior to use. (If there is no antirotation device attached, the lead screw cannot extend or retract.)
(2) The horizontal payload is the value when used in combination with an external guide.
(3) The payload is the value when the actuator is operated at an acceleration of 0.3 G (0.2G for lead 2, if used vertically and for lead screw specification). The acceleration limit is the value indicated above.
(4) Do not apply an external force on the rod in any direction other than the direction the rod is moving in.
(5) If the actuator is used vertically, pay attention to rod contact because the rod will come down when the power is turned off.

Actuator Specifications

■ Lead and Load Capacity

Model	Motor Output (W)	Feed Screw	Lead (mm)	Max. Load Capacity Horizontal (kg)	Max. Load Capacity Vertical (kg)	Rated Thrust (N)	Positioning Repeatability (mm)	Stroke (mm)
RCA2-RP4NA-I-20-6- ① - ② - ③	20	Ball Screw	6	2	0.5	33.8	±0.02	30 50
RCA2-RP4NA-I-20-4- ① - ② - ③			4	3	0.75	50.7		
RCA2-RP4NA-I-20-2- ① - ② - ③			2	6	1.5	101.5		
RCA2-RP4NA-I-20-6S- ① - ② - ③	20	Lead Screw	6	0.25	0.125	19.9	±0.05	30 50
RCA2-RP4NA-I-20-4S- ① - ② - ③			4	0.5	0.25	29.8		
RCA2-RP4NA-I-20-2S- ① - ② - ③			2	1	0.5	59.7		

Legend ① Compatible controller ② Cable length ③ Options

■ Stroke and Maximum Speed

	Lead \ Stroke	30 (mm)	50 (mm)
Ball Screw	6	270 <220>	300
	4	200	
	2	100	
Lead Screw	6	220	300
	4	200	
	2	100	

* The values enclosed in < > apply for vertical usage. (Unit: mm/s)

Cable List

Type	Cable Symbol	
Standard (Robot Cables)	**P** (1m)	
	S (3m)	
	M (5m)	
Special Lengths	**X06** (6m) ~ **X10** (10m)	
	X11 (11m) ~ **X15** (15m)	
	X16 (16m) ~ **X20** (20m)	

* The RCA2 comes standard with a robot cable.
* See page A-39 for cables for maintenance.

Actuator Specifications

Item		Description
Drive System		Ball screw/Lead screw, Ø6 mm, rolled C10
Lost motion		Ball screw: 0.1 mm or less/Lead screw: 0.3 mm or less (default value)
Frame		Material: Aluminum, white alumite treated
Ambient operating temperature, humidity		0 to 40 ˚C, 85% RH or less (Non-condensing)
Service life	Lead screw specification	Horizontal specification: 10 million cycles, Vertical specification: 5 million cycles
	Ball screw specification	5000 km

Option List

Name	Option Code	See Page	
Cable exit from left	**K1**	→ A-32	
Cable exit from front	**K2**	→ A-32	
Cable exit from right	**K3**	→ A-32	
Power-saving	**LA**	→ A-32	

Dimensions

CAD drawings can be downloaded from IAI website. www.robocylinder.de

For Special Orders P. A-9

2/3D CAD

*1 A motor-encoder cable is connected here. See page A-39 for details on cables.
*2 When homing, the rod moves to the mechanical end; therefore, please watch for any interference with the surrounding objects.
*3 The orientation of the bolt will vary depending on the product.

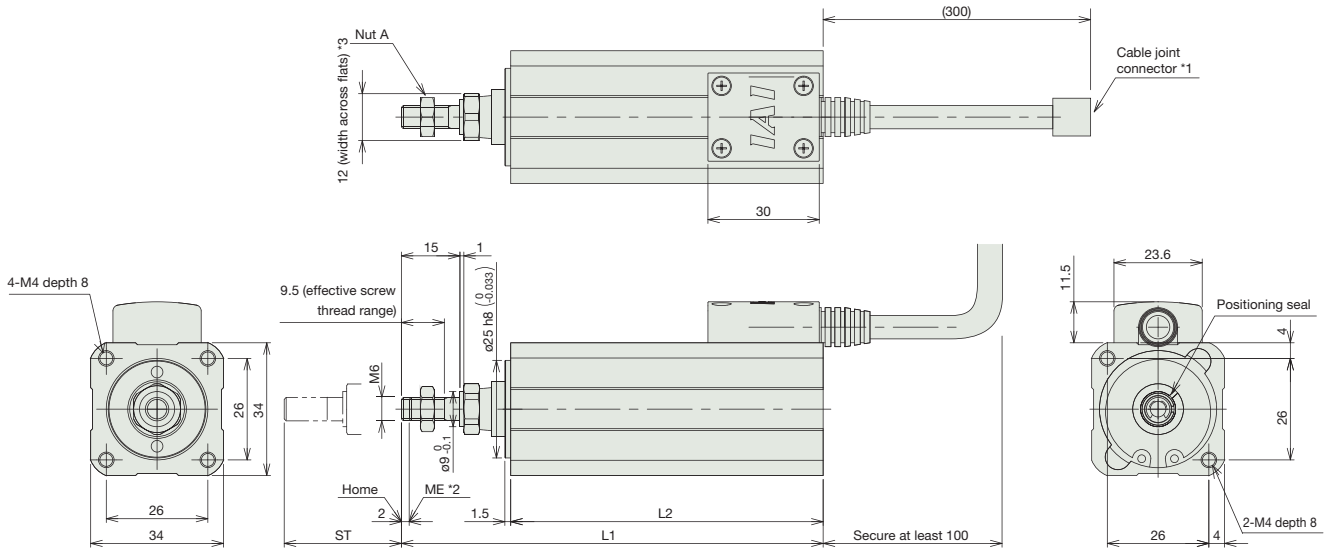

ME: Mechanical end

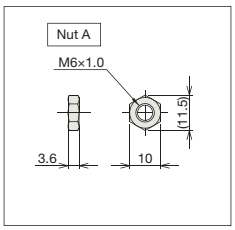

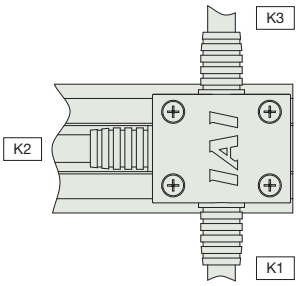

Connector cable exit direction

Dimensions/Weight by Stroke

Stroke	30	50
L1	108	128
L2	80	100
Weight (kg)	0.32	0.36

Compatible Controllers

The RCA2 series actuators can operate with the controllers below. Select the controller according to your usage.

Name	External View	Model	Description	Max. Positioning Points	Input Voltage	Power Supply Capacity		See Page
Solenoid Valve Type		AMEC-C-20I①-NP-2-2	Easy-to-use controller, even for beginners	3 points	AC115V / AC230V* *planned	2.4A rated		→ P477
		ASEP-C-20I①-NP-2-0	Operable with same signal as solenoid valve. Supports both single and double solenoid types. No homing necessary with simple absolute type.		DC24V	(Standard) 1.3A rated 4.4A max. (Power-saving) 1.3A rated 2.5A max.		→ P487
Splash-Proof Solenoid Valve Type		ASEP-CW-20I①-NP-2-0						
Positioner Type		ACON-C-20I①-NP-2-0	Positioning is possible for up to 512 points	512 points				→ P535
Safety-Compliant Positioner Type		ACON-CG-20I①-NP-2-0						
Pulse Train Input Type (Differen tial Line Driver)		ACON-PL-20I①-NP-2-0	Pulse train input type with differential line driver support	(–)				
Pulse Train Input Type (Open Collector)		ACON-PO-20I①-NP-2-0	Pulse train input type with open collector support					
Serial Communication Type		ACON-SE-20I①-N-0-0	Dedicated to serial communication	64 points				
Field Network Type		RACON-20①	Dedicated to field network	768 points				→ P503
Program Control Type		ASEL-C-1-20I①-NP-2-0	Programmed operation is possible Operation is possible on up to 2 axes	1500 points				→ P567

* This is for the single-axis ASEL.
* ① is a placeholder for the code "LA" if the power-saving option is specified.

Slider Type
Mini
Standard
Controllers Integrated
Rod Type
Mini
Standard
Controllers Integrated
Table/Arm /Flat Type
Mini
Standard
Gripper/ Rotary Type
Linear Motor Type
Cleanroom Type
Splash Proof
Controllers
PMEC /AMEC
PSEP /ASEP
ROBO NET
ERC2
PCON
ACON
SCON
PSEL
ASEL
SSEL
XSEL
Pulse Motor
Servo Motor (24V)
Servo Motor (230V)
Linear Motor

RCA2-GS3NA

RoboCylinder Mini Rod Type Short-Length Free Mounting Type with Single Guide
28mm Width 24V Servo Motor Ball Screw/Lead Screw

■ Configuration: RCA2 – GS3NA – I – 10 – ☐ – ☐ – ☐ – ☐ – ☐ – ☐

Series	Type	Encoder	Motor	Lead	Stroke	Compatible Controllers	Cable Length	Option
		I: Incremental * The Simple absolute encoder is also considered type "I".	10 : 10W Servo Motor	4 : Ball screw 4mm 2 : Ball screw 2mm 1 : Ball screw 1mm 4S : lead screw 4mm 2S : lead screw 2mm 1S : lead screw 1mm	30 : 30mm 50 : 50mm	A1 : ACON RACON ASEL A3 : AMEC ASEP	N : None P : 1m S : 3m M : 5m X ☐☐ : Custom Length	K1~3 : Connector cable exit direction LA : Power-saving

* See page Pre-35 for an explanation of the naming convention.

Power-saving

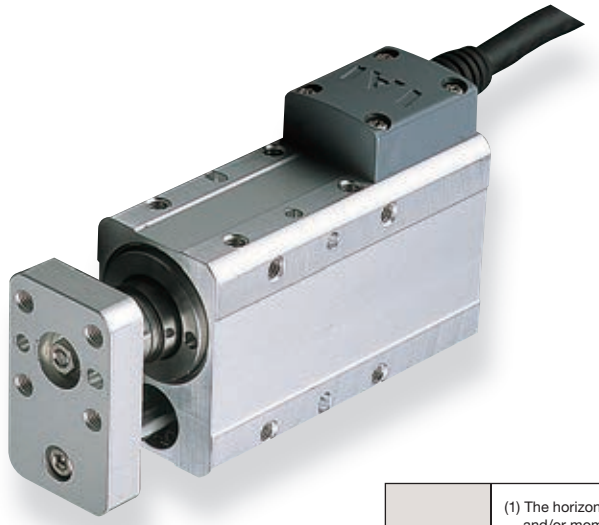

Technical References P. A-5

POINT Notes on Selection

(1) The horizontal load capacity is based on the use of a guide to prevent any radial and/or moment load on the rod.
If no guide will be installed, see the Tip Load vs. Service Life graph → page (A-81).
(2) The load capacity is based on operation at an acceleration of 0.3G (0.2G for the 1mm-lead model, lead screw model, or when used vertically). This is the upper limit of the acceleration.
(3) If the actuator is used vertically, pay attention to rod contact because the rod will come down when the power is turned off.

Actuator Specifications

■ Lead and Load Capacity

Model	Motor output (W)	Feed screw	Lead (mm)	Maximum payload Horizontal (kg)	Maximum payload Vertical (kg)	Rated thrust (N)	Positioning Repeatability (mm)	Stroke (mm)
RCA2-GS3NA-I-10-4-①-②-③-④	10	Ball screw	4	0.75	0.25	42.7	±0.02	30 50
RCA2-GS3NA-I-10-2-①-②-③-④			2	1.5	0.5	85.5		
RCA2-GS3NA-I-10-1-①-②-③-④			1	3	1	170.9		
RCA2-GS3NA-I-10-4S-①-②-③-④	10	Lead screw	4	0.25	0.125	25.1	±0.05	30 50
RCA2-GS3NA-I-10-2S-①-②-③-④			2	0.5	0.25	50.3		
RCA2-GS3NA-I-10-1S-①-②-③-④			1	1	0.5	100.5		

Legend ① Stroke ② Compatible Controllers ③ Cable length ④ Option

■ Stroke and Maximum Speed

	Lead \ Stroke	30 (mm)	50 (mm)
Ball screw	4	200	
	2	100	
	1	50	
Lead screw	4	200	
	2	100	
	1	50	

(Unit = mm/s)

Cable List

Type	Cable Symbol	
Standard (Robot Cables)	**P** (1m)	
	S (3m)	
	M (5m)	
Special Lengths	**X06** (6m) ~ **X10** (10m)	
	X11 (11m) ~ **X15** (15m)	
	X16 (16m) ~ **X20** (20m)	

* The RCA2 comes standard with a robot cable.
* See page A-39 for cables for maintenance.

Actuator Specifications

Item		Description
Drive System		Ball screw/Lead screw, Ø4 mm, rolled C10
Lost motion		Ball screw: 0.1 mm or less/Lead screw: 0.3 mm or less (default value)
Frame		Material: Aluminum, white alumite treated
Ambient operating temperature, humidity		0 to 40 ˚C, 85% RH or less (Non-condensing)
Service life	Lead screw specification	Horizontal specification: 10 million cycles, Vertical specification: 5 million cycles
	Ball screw specification	5000 km

Option List

Name	Option Code	See Page	
Cable exit from left	**K1**	→ A-32	
Cable exit from front	**K2**	→ A-32	
Cable exit from right	**K3**	→ A-32	
Power-saving	**LA**	→ A-32	

Dimensions

CAD drawings can be downloaded from IAI website. www.robocylinder.de

For Special Orders P. A-9

2/3D CAD

*1 A motor-encoder cable is connected here. See page A-39 for details on cables.
*2 When homing, the rod moves to the mechanical end; therefore, please watch for any interference with the surrounding objects.

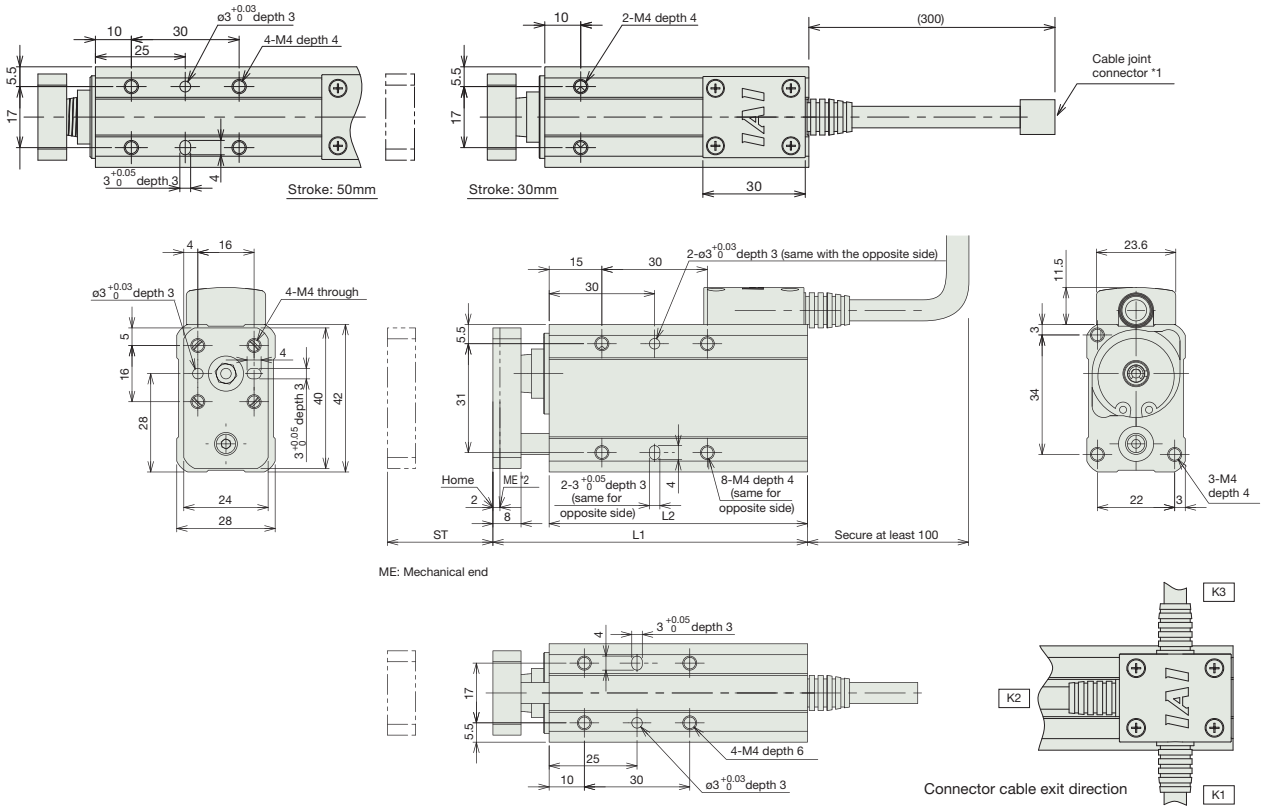

Dimensions/Weight by Stroke

Stroke	30	50
L1	89.5	109.5
L2	73.5	93.5
Weight (kg)	0.32	0.36

Compatible Controllers

The RCA2 series actuators can operate with the controllers below. Select the controller according to your usage.

Name	External View	Model	Description	Max. Positioning Points	Input Voltage	Power Supply Capacity		See Page
Solenoid Valve Type		AMEC-C-10I①-NP-2-2	Easy-to-use controller, even for beginners	3 points	AC115V / AC230V* *planned	2.4A rated		→ P477
		ASEP-C-10I①-NP-2-0	Operable with same signal as solenoid valve. Supports both single and double solenoid types. No homing necessary with simple absolute type.		DC24V	(Standard) 1.3A rated 4.4A max. (Power-saving) 1.3A rated 2.5A max.		→ P487
Splash-Proof Solenoid Valve Type		ASEP-CW-10I①-NP-2-0						
Positioner Type		ACON-C-10I①-NP-2-0	Positioning is possible for up to 512 points	512 points				→ P535
Safety-Compliant Positioner Type		ACON-CG-10I①-NP-2-0						
Pulse Train Input Type (Differen tial Line Driver)		ACON-PL-10I①-NP-2-0	Pulse train input type with differential line driver support	(–)				
Pulse Train Input Type (Open Collector)		ACON-PO-10I①-NP-2-0	Pulse train input type with open collector support					
Serial Communication Type		ACON-SE-10I①-N-0-0	Dedicated to serial communication	64 points				
Field Network Type		RACON-10①	Dedicated to field network	768 points				→ P503
Program Control Type		ASEL-C-1-10I①-NP-2-0	Programmed operation is possible Operation is possible on up to 2 axes	1500 points				→ P567

* This is for the single-axis ASEL.
* ① is a placeholder for the code "LA" if the power-saving option is specified.

Slider Type
Mini
Standard
Controllers Integrated
Rod Type
Mini
Standard
Controllers Integrated
Table/Arm /Flat Type
Mini
Standard
Gripper/ Rotary Type
Linear Motor Type
Cleanroom Type
Splash Proof
Controllers
PMEC /AMEC
PSEP /ASEP
ROBO NET
ERC2
PCON
ACON
SCON
PSEL
ASEL
SSEL
XSEL
Pulse Motor
Servo Motor (24V)
Servo Motor (230V)
Linear Motor

RCA2-GS4NA

RoboCylinder Mini Rod Type Short-Length Free Mounting Type with Single Guide
34mm Width 24V Servo Motor Ball Screw/Lead Screw

■ Configuration: **RCA2** – **GS4NA** – **I** – ☐ – ☐ – ☐ – ☐ – ☐ – ☐

Series	Type	Encoder	Motor	Lead	Stroke	Compatible Controllers	Cable Length	Option
		I: Incremental * The Simple absolute encoder is also considered type "I".	20 : 20W Servo Motor	6 : 6mm ball screw 4 : 4mm ball screw 2 : 2mm ball screw 6S : 6mm lead screw 4S : 4mm lead screw 2S : 2mm lead screw	30 : 30mm 50 : 50mm	A1 : ACON RACON ASEL A3 : AMEC ASEP	N : None P : 1m S : 3m M : 5m X ☐☐ : Custom Length	K1~3 : Connector cable exit direction LA : Power-saving

* See page Pre-35 for an explanation of the naming convention.

Power-saving

Technical References P. A-5

POINT Notes on Selection

(1) The horizontal load capacity is based on the use of a guide to prevent any radial and/or moment load on the rod.
If no guide will be installed, see the Tip Load vs. Service Life graph → page (A-81).
(2) The load capacity is based on operation at an acceleration of 0.3G (0.2G for the 2mm-lead model, lead screw model, or when used vertically). This is the upper limit of the acceleration.
(3) If the actuator is used vertically, pay attention to rod contact because the rod will come down when the power is turned off.

Actuator Specifications

■ Lead and Load Capacity

Model	Motor Output (W)	Feed Screw	Lead (mm)	Max. Load Capacity Horizontal (kg)	Max. Load Capacity Vertical (kg)	Rated Thrust (N)	Positioning Repeatability (mm)	Stroke (mm)
RCA2-GS4NA-I-20-6- ① - ② - ③	20	Ball Screw	6	2	0.5	33.8	±0.02	30 50
RCA2-GS4NA-I-20-4- ① - ② - ③			4	3	0.75	50.7		
RCA2-GS4NA-I-20-2- ① - ② - ③			2	6	1.5	101.5		
RCA2-GS4NA-I-20-6S- ① - ② - ③	20	Lead Screw	6	0.25	0.125	19.9	±0.05	30 50
RCA2-GS4NA-I-20-4S- ① - ② - ③			4	0.5	0.25	29.8		
RCA2-GS4NA-I-20-2S- ① - ② - ③			2	1	0.5	59.7		

Legend ① Compatible controller ② Cable length ③ Options

■ Stroke and Maximum Speed

Lead \ Stroke		30 (mm)	50 (mm)
Ball Screw	6	270 <220>	300
	4	200	
	2	100	
Lead Screw	6	220	300
	4	200	
	2	100	

* The values enclosed in < > apply for vertical usage. (Unit: mm/s)

Cable List

Type	Cable Symbol	
Standard (Robot Cables)	**P** (1m)	
	S (3m)	
	M (5m)	
Special Lengths	**X06** (6m) ~ **X10** (10m)	
	X11 (11m) ~ **X15** (15m)	
	X16 (16m) ~ **X20** (20m)	

* The RCA2 comes standard with a robot cable.
* See page A-39 for cables for maintenance.

Actuator Specifications

Item		Description
Drive System		Ball screw/Lead screw, Ø6 mm, rolled C10
Lost motion		Ball screw: 0.1 mm or less/Lead screw: 0.3 mm or less (default value)
Frame		Material: Aluminum, white alumite treated
Ambient operating temperature, humidity		0 to 40 °C, 85% RH or less (Non-condensing)
Service life	Lead screw specification	Horizontal specification: 10 million cycles, Vertical specification: 5 million cycles
	Ball screw specification	5000 km

Option List

Name	Option Code	See Page	
Cable exit from left	**K1**	→ A-32	
Cable exit from front	**K2**	→ A-32	
Cable exit from right	**K3**	→ A-32	
Power-saving	**LA**	→ A-32	

Dimensions

CAD drawings can be downloaded from IAI website. www.robocylinder.de

For Special Orders P. A-9

2/3D CAD

*1 A motor-encoder cable is connected here. See page A-39 for details on cables.
*2 When homing, the rod moves to the mechanical end; therefore, please watch for any interference with the surrounding objects.

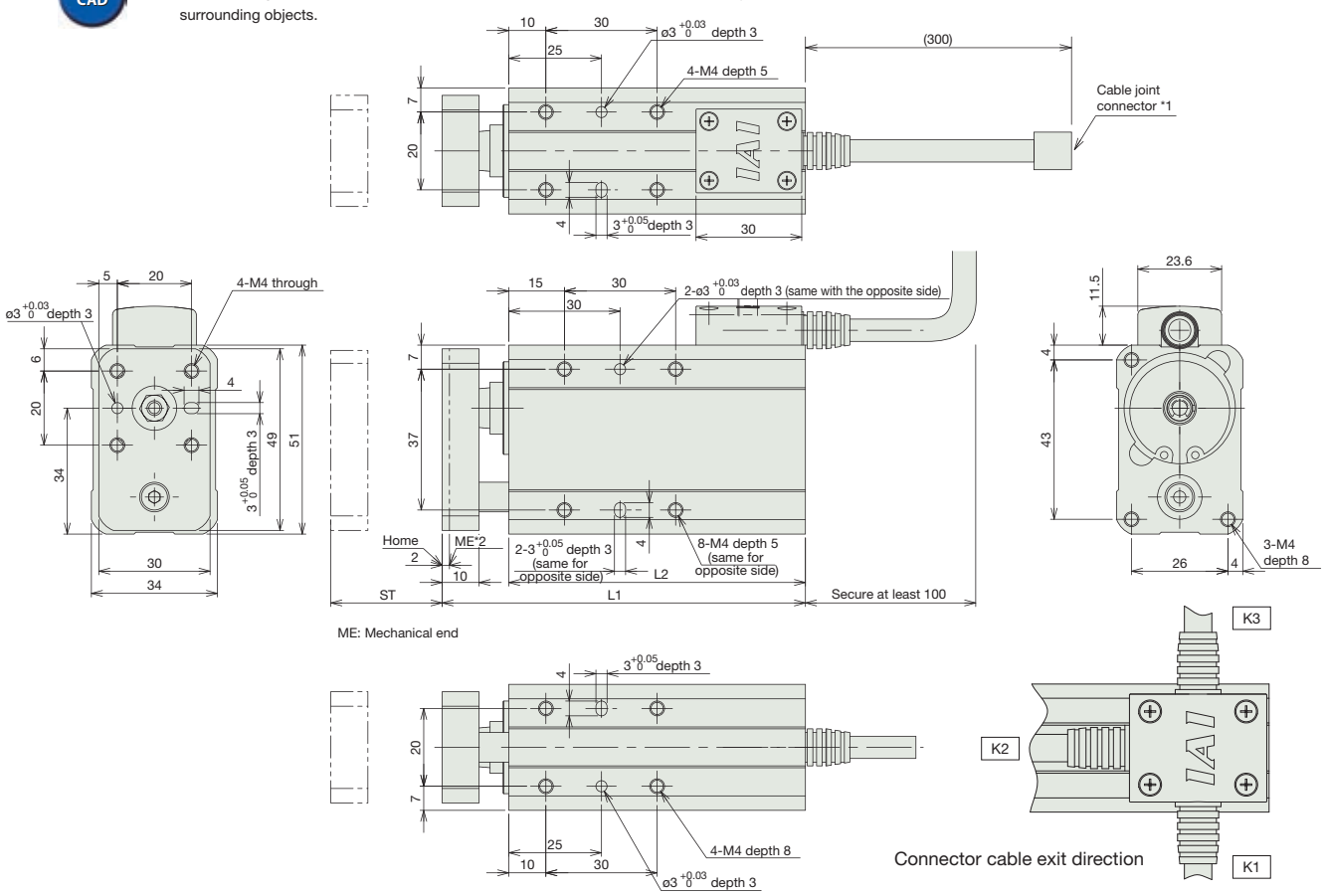

Dimensions/Weight by Stroke

Stroke	30	50
L1	98	118
L2	80	100
Weight (kg)	0.55	0.63

Compatible Controllers

The RCA2 series actuators can operate with the controllers below. Select the controller according to your usage.

Name	External View	Model	Description	Max. Positioning Points	Input Voltage	Power Supply Capacity		See Page
Solenoid Valve Type		AMEC-C-20I①-NP-2-2	Easy-to-use controller, even for beginners	3 points	AC115V / AC230V* *planned	2.4A rated		→ P477
		ASEP-C-20I①-NP-2-0	Operable with same signal as solenoid valve. Supports both single and double solenoid types. No homing necessary with simple absolute type.		DC24V	(Standard) 1.3A rated 4.4A max. (Power-saving) 1.3A rated 2.5A max.		→ P487
Splash-Proof Solenoid Valve Type		ASEP-CW-20I①-NP-2-0						
Positioner Type		ACON-C-20I①-NP-2-0	Positioning is possible for up to 512 points	512 points				→ P535
Safety-Compliant Positioner Type		ACON-CG-20I①-NP-2-0						
Pulse Train Input Type (Differen tial Line Driver)		ACON-PL-20I①-NP-2-0	Pulse train input type with differential line driver support	(–)				
Pulse Train Input Type (Open Collector)		ACON-PO-20I①-NP-2-0	Pulse train input type with open collector support					
Serial Communication Type		ACON-SE-20I①-N-0-0	Dedicated to serial communication	64 points				
Field Network Type		RACON-20①	Dedicated to field network	768 points				→ P503
Program Control Type		ASEL-C-1-20I①-NP-2-0	Programmed operation is possible Operation is possible on up to 2 axes	1500 points				→ P567

* This is for the single-axis ASEL.
* ① is a placeholder for the code "LA" if the power-saving option is specified.

Slider Type
Mini
Standard
Controllers Integrated
Rod Type
Mini
Standard
Controllers Integrated
Table/Arm /Flat Type
Mini
Standard
Gripper/ Rotary Type
Linear Motor Type
Cleanroom Type
Splash Proof
Controllers
PMEC /AMEC
PSEP /ASEP
ROBO NET
ERC2
PCON
ACON
SCON
PSEL
ASEL
SSEL
XSEL
Pulse Motor
Servo Motor (24V)
Servo Motor (230V)
Linear Motor

RCA2-GD3NA

RoboCylinder Mini Rod Type Short-Length Free Mounting Type with Double Guide
28mm Width 24V Servo Motor Ball Screw/Lead Screw

■ Configuration: **RCA2** – **GD3NA** – **I** – **10** – □ – □ – □ – □ – □ – □

Series	Type	Encoder	Motor	Lead	Stroke	Compatible Controllers	Cable Length	Option
		I: Incremental * The Simple absolute encoder is also considered type "I".	10 : 10W Servo Motor	4 : Ball screw 4mm 2 : Ball screw 2mm 1 : Ball screw 1mm 4S : lead screw 4mm 2S : lead screw 2mm 1S : lead screw 1mm	30 : 30mm 50 : 50mm	A1 : ACON RACON ASEL A3 : AMEC ASEP	N : None P : 1m S : 3m M : 5m X □□ : Custom Length	K1~3 : Connector cable exit direction LA : Power-saving

* See page Pre-35 for an explanation of the naming convention.

Power-saving

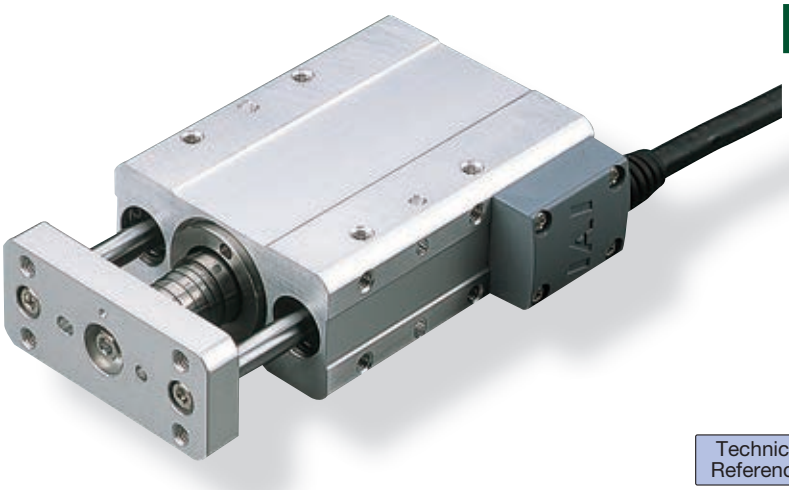

Technical References P. A-5

POINT Notes on Selection

(1) The horizontal load capacity is based on the use of a guide to prevent any radial and/or moment load on the rod.
If no guide will be installed, see the Tip Load vs. Service Life graph → page (A-82).
(2) The load capacity is based on operation at an acceleration of 0.3G (0.2G for the 1mm-lead model, lead screw model, or when used vertically). This is the upper limit of the acceleration.
(3) If the actuator is used vertically, pay attention to rod contact because the rod will come down when the power is turned off.

Actuator Specifications

■ Lead and Load Capacity

Model	Motor output (W)	Feed screw	Lead (mm)	Maximum payload Horizontal (kg)	Maximum payload Vertical (kg)	Rated thrust (N)	Positioning Repeatability (mm)	Stroke (mm)
RCA2-GD3NA-I-10-4 - ① - ② - ③ - ④	10	Ball screw	4	0.75	0.25	42.7	±0.02	30 50
RCA2-GD3NA-I-10-2 - ① - ② - ③ - ④			2	1.5	0.5	85.5		
RCA2-GD3NA-I-10-1 - ① - ② - ③ - ④			1	3	1	170.9		
RCA2-GD3NA-I-10-4S - ① - ② - ③ - ④	10	Lead screw	4	0.25	0.125	25.1	±0.05	30 50
RCA2-GD3NA-I-10-2S - ① - ② - ③ - ④			2	0.5	0.25	50.3		
RCA2-GD3NA-I-10-1S - ① - ② - ③ - ④			1	1	0.5	100.5		

Legend ① Stroke ② Compatible Controllers ③ Cable length ④ Option

■ Stroke and Maximum Speed

Lead		Stroke 30 (mm)	Stroke 50 (mm)
Ball screw	4	200	
	2	100	
	1	50	
Lead screw	4	200	
	2	100	
	1	50	

(Unit = mm/s)

Cable List

Type	Cable Symbol	
Standard (Robot Cables)	**P** (1m)	
	S (3m)	
	M (5m)	
Special Lengths	**X06** (6m) ~ **X10** (10m)	
	X11 (11m) ~ **X15** (15m)	
	X16 (16m) ~ **X20** (20m)	

* The RCA2 comes standard with a robot cable.
* See page A-39 for cables for maintenance.

Actuator Specifications

Item		Description
Drive System		Ball screw/Lead screw, Ø4 mm, rolled C10
Lost motion		Ball screw: 0.1 mm or less/Lead screw: 0.3 mm or less (default value)
Frame		Material: Aluminum, white alumite treated
Ambient operating temperature, humidity		0 to 40 ˚C, 85% RH or less (Non-condensing)
Service life	Lead screw specification	Horizontal specification: 10 million cycles, Vertical specification: 5 million cycles
	Ball screw specification	5000 km

Option List

Name	Option Code	See Page	
Cable exit from left	**K1**	→ A-32	
Cable exit from front	**K2**	→ A-32	
Cable exit from right	**K3**	→ A-32	
Power-saving	**LA**	→ A-32	

Dimensions

CAD drawings can be downloaded from IAI website. www.robocylinder.de

For Special Orders P. A-9

2/3D CAD

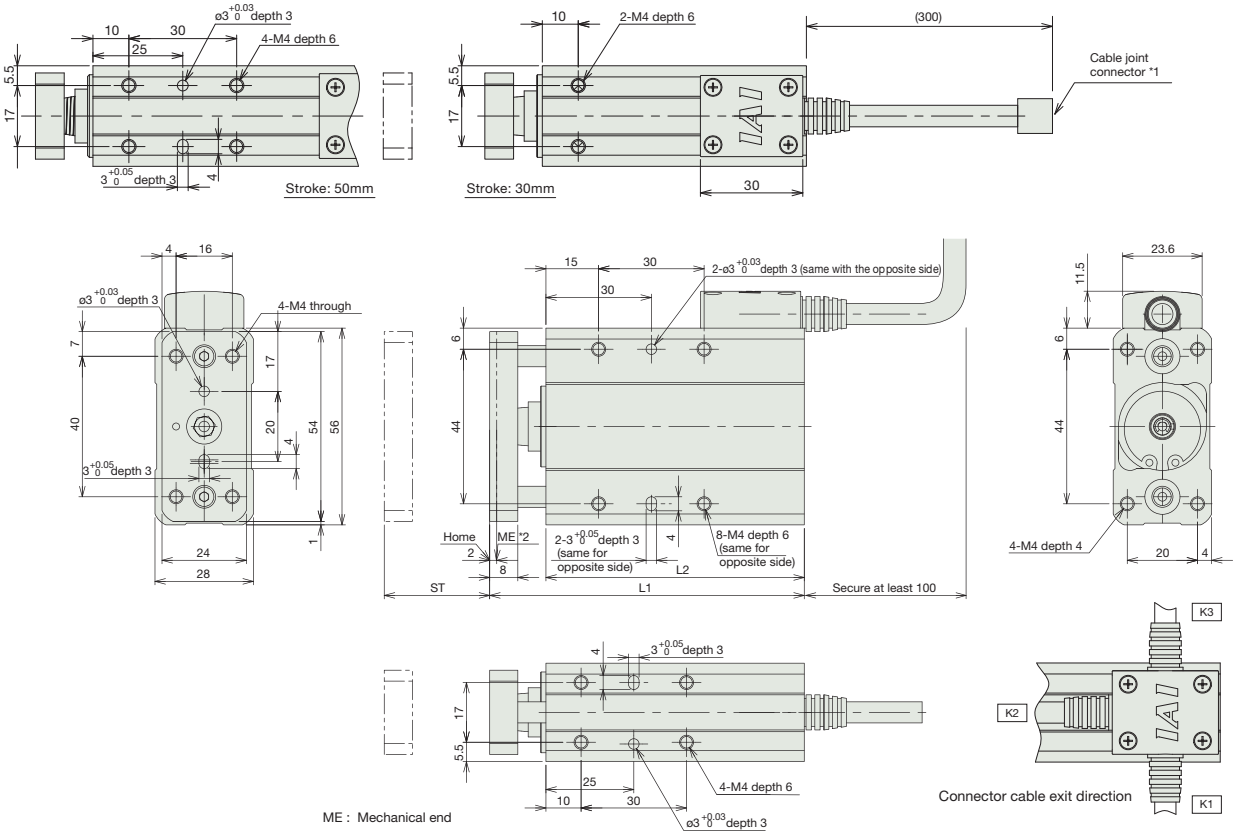

*1 A motor-encoder cable is connected here. See page A-39 for details on cables.
*2 When homing, the rod moves to the mechanical end; therefore, please watch for any interference with the surrounding objects.

Dimensions/Weight by Stroke

Stroke	30	50
L1	89.5	109.5
L2	73.5	93.5
Weight (kg)	0.41	0.48

Compatible Controllers

The RCA2 series actuators can operate with the controllers below. Select the controller according to your usage.

Name	External View	Model	Description	Max. Positioning Points	Input Voltage	Power Supply Capacity		See Page
Solenoid Valve Type		AMEC-C-10I①-NP-2-2	Easy-to-use controller, even for beginners	3 points	AC115V / AC230V* *planned	2.4A rated		→ P477
		ASEP-C-10I①-NP-2-0	Operable with same signal as solenoid valve. Supports both single and double solenoid types. No homing necessary with simple absolute type.		DC24V	(Standard) 1.3A rated 4.4A max. (Power-saving) 1.3A rated 2.5A max.		→ P487
Splash-Proof Solenoid Valve Type		ASEP-CW-10I①-NP-2-0						
Positioner Type		ACON-C-10I①-NP-2-0	Positioning is possible for up to 512 points	512 points				→ P535
Safety-Compliant Positioner Type		ACON-CG-10I①-NP-2-0						
Pulse Train Input Type (Differen tial Line Driver)		ACON-PL-10I①-NP-2-0	Pulse train input type with differential line driver support	(–)				
Pulse Train Input Type (Open Collector)		ACON-PO-10I①-NP-2-0	Pulse train input type with open collector support					
Serial Communication Type		ACON-SE-10I①-N-0-0	Dedicated to serial communication	64 points				
Field Network Type		RACON-10①	Dedicated to field network	768 points				→ P503
Program Control Type		ASEL-C-1-10I①-NP-2-0	Programmed operation is possible Operation is possible on up to 2 axes	1500 points				→ P567

* This is for the single-axis ASEL.
* ① is a placeholder for the code "LA" if the power-saving option is specified.

Slider Type
Mini
Standard
Controllers Integrated
Rod Type
Mini
Standard
Controllers Integrated
Table/Arm /Flat Type
Mini
Standard
Gripper/ Rotary Type
Linear Motor Type
Cleanroom Type
Splash Proof
Controllers
PMEC /AMEC
PSEP /ASEP
ROBO NET
ERC2
PCON
ACON
SCON
PSEL
ASEL
SSEL
XSEL
Pulse Motor
Servo Motor (24V)
Servo Motor (230V)
Linear Motor

RCA2-GD4NA

RoboCylinder Mini Rod Type Short-Length Free Mounting Type with Double Guide
34mm Width 24V Servo Motor Ball Screw/Lead Screw

■ Configuration: **RCA2** – **GD4NA** – **I** – **20** – □ – □ – □ – □ – □ – □

Series	Type	Encoder	Motor	Lead	Stroke	Compatible Controllers	Cable Length	Option
		I: Incremental * The Simple absolute encoder is also considered type "I".	20 : 20W Servo Motor	6 : Ball screw 6mm 4 : Ball screw 4mm 2 : Ball screw 2mm 6S : lead screw 6mm 4S : lead screw 4mm 2S : lead screw 2mm	30 : 30mm 50 : 50mm	A1 : ACON RACON ASEL A3 : AMEC ASEP	N : None P : 1m S : 3m M : 5m X □□ : Custom Length	K1~3 : Connector cable exit direction LA : Power-saving

* See page Pre-35 for an explanation of the naming convention.

Power-saving

Technical References P. A-5

POINT Notes on Selection

(1) The horizontal load capacity is based on the use of a guide to prevent any radial and/or moment load on the rod.
If no guide will be installed, see the Tip Load vs. Service Life graph → page (A-82).
(2) The load capacity is based on operation at an acceleration of 0.3G (0.2G for the 2mm-lead model, lead screw model, or when used vertically). This is the upper limit of the acceleration.
(3) If the actuator is used vertically, pay attention to rod contact because the rod will come down when the power is turned off.

Actuator Specifications

■ Lead and Load Capacity

Model	Motor Output (W)	Feed Screw	Lead (mm)	Max. Load Capacity Horizontal (kg)	Max. Load Capacity Vertical (kg)	Rated Thrust (N)	Positioning Repeatability (mm)	Stroke (mm)
RCA2-GD4NA-I-20-6- ① - ② - ③	20	Ball Screw	6	2	0.5	33.8	±0.02	30 50
RCA2-GD4NA-I-20-4- ① - ② - ③			4	3	0.75	50.7		
RCA2-GD4NA-I-20-2- ① - ② - ③			2	6	1.5	101.5		
RCA2-GD4NA-I-20-6S- ① - ② - ③	20	Lead Screw	6	0.25	0.125	19.9	±0.05	30 50
RCA2-GD4NA-I-20-4S- ① - ② - ③			4	0.5	0.25	29.8		
RCA2-GD4NA-I-20-2S- ① - ② - ③			2	1	0.5	59.7		

Legend ① Compatible controller ② Cable length ③ Options

■ Stroke and Maximum Speed

Lead \ Stroke		30 (mm)	50 (mm)
Ball Screw	6	270 <220>	300
	4	200	
	2	100	
Lead Screw	6	220	300
	4	200	
	2	100	

* The values enclosed in < > apply for vertical usage. (Unit: mm/s)

Cable List

Type	Cable Symbol	
Standard (Robot Cables)	**P** (1m)	
	S (3m)	
	M (5m)	
Special Lengths	**X06** (6m) ~ **X10** (10m)	
	X11 (11m) ~ **X15** (15m)	
	X16 (16m) ~ **X20** (20m)	

* The RCA2 comes standard with a robot cable.
* See page A-39 for cables for maintenance.

Actuator Specifications

Item		Description
Drive System		Ball screw/Lead screw, Ø6 mm, rolled C10
Lost motion		Ball screw: 0.1 mm or less/Lead screw: 0.3 mm or less (default value)
Frame		Material: Aluminum, white alumite treated
Ambient operating temperature, humidity		0 to 40 °C, 85% RH or less (Non-condensing)
Service life	Lead screw specification	Horizontal specification: 10 million cycles, Vertical specification: 5 million cycles
	Ball screw specification	5000 km

Option List

Name	Option Code	See Page	
Cable exit from left	**K1**	→ A-32	
Cable exit from front	**K2**	→ A-32	
Cable exit from right	**K3**	→ A-32	
Power-saving	**LA**	→ A-32	

Dimensions

CAD drawings can be downloaded from IAI website. www.robocylinder.de

For Special Orders P. A-9

2/3D CAD

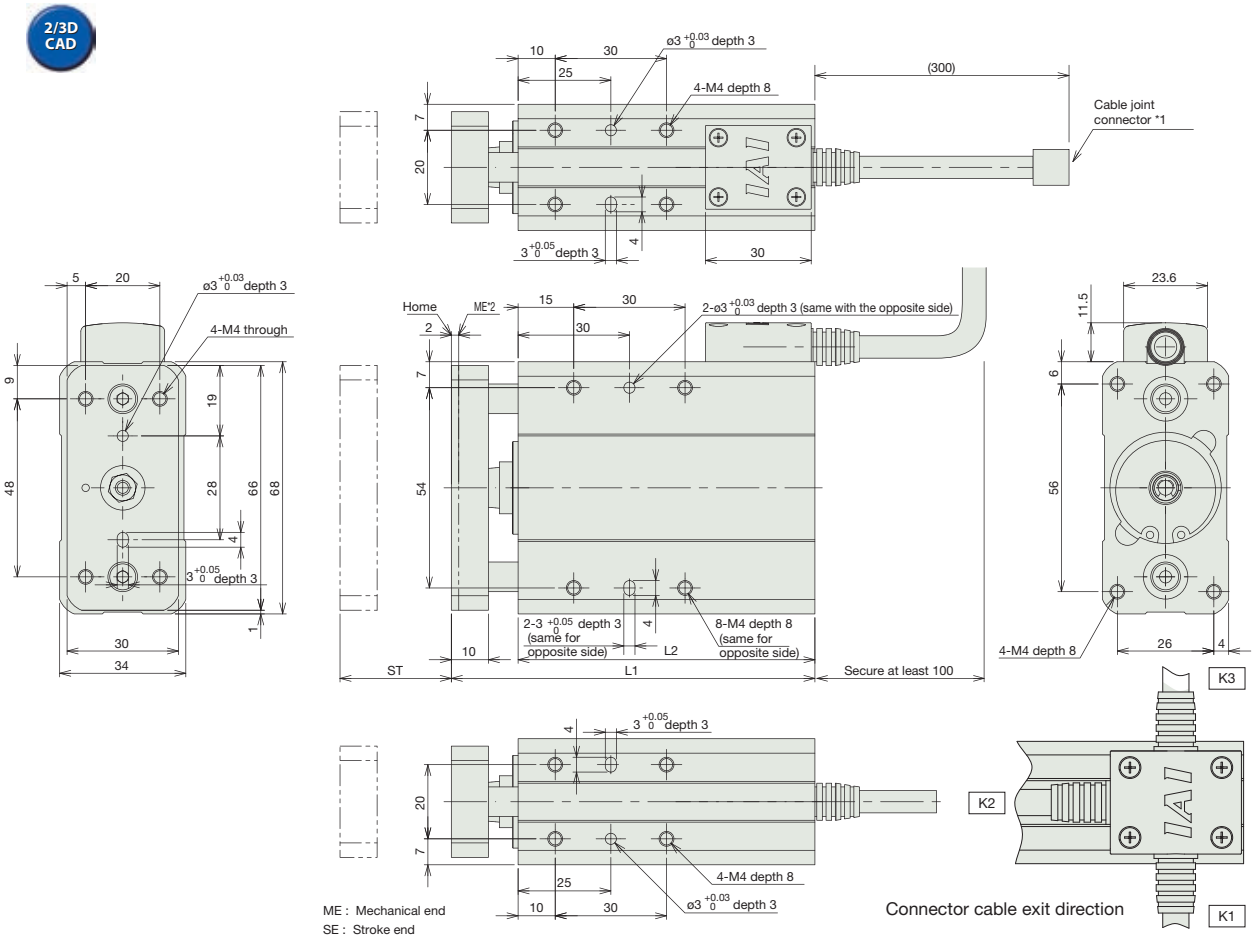

*1 A motor-encoder cable is connected here. See page A-39 for details on cables.
*2 When homing, the rod moves to the mechanical end; therefore, please watch for any interference with the surrounding objects.

Dimensions/Weight by Stroke

Stroke	30	50
L1	98	118
L2	80	100
Weight (kg)	0.64	0.76

Compatible Controllers

The RCA2 series actuators can operate with the controllers below. Select the controller according to your usage.

Name	External View	Model	Description	Max. Positioning Points	Input Voltage	Power Supply Capacity		See Page
Solenoid Valve Type		AMEC-C-20I①-NP-2-2	Easy-to-use controller, even for beginners	3 points	AC115V / AC230V* *planned	2.4A rated		→ P477
		ASEP-C-20I①-NP-2-0	Operable with same signal as solenoid valve. Supports both single and double solenoid types. No homing necessary with simple absolute type.		DC24V	(Standard) 1.3A rated 4.4A max. (Power-saving) 1.3A rated 2.5A max.		→ P487
Splash-Proof Solenoid Valve Type		ASEP-CW-20I①-NP-2-0						
Positioner Type		ACON-C-20I①-NP-2-0	Positioning is possible for up to 512 points	512 points				→ P535
Safety-Compliant Positioner Type		ACON-CG-20I①-NP-2-0						
Pulse Train Input Type (Differen tial Line Driver)		ACON-PL-20I①-NP-2-0	Pulse train input type with differential line driver support	(–)				
Pulse Train Input Type (Open Collector)		ACON-PO-20I①-NP-2-0	Pulse train input type with open collector support					
Serial Communication Type		ACON-SE-20I①-N-0-0	Dedicated to serial communication	64 points				
Field Network Type		RACON-20①	Dedicated to field network	768 points				→ P503
Program Control Type		ASEL-C-1-20I①-NP-2-0	Programmed operation is possible Operation is possible on up to 2 axes	1500 points				→ P567

* This is for the single-axis ASEL.
* ① is a placeholder for the code "LA" if the power-saving option is specified.

Slider Type
Mini
Standard
Controllers Integrated
Rod Type
Mini
Standard
Controllers Integrated
Table/Arm /Flat Type
Mini
Standard
Gripper/ Rotary Type
Linear Motor Type
Cleanroom Type
Splash Proof
Controllers
PMEC /AMEC
PSEP /ASEP
ROBO NET
ERC2
PCON
ACON
SCON
PSEL
ASEL
SSEL
XSEL
Pulse Motor
Servo Motor (24V)
Servo Motor (230V)
Linear Motor

RCA2-SD3NA

RoboCylinder Mini Rod Type Short-Length Slide Unit Type with Double Guide
60mm Width 24V Servo Motor Ball Screw/Lead Screw

■ Configuration: **RCA2** – **SD3NA** – **I** – **10** – ☐ – ☐ – ☐ – ☐ – ☐ – ☐

Series	Type	Encoder	Motor	Lead	Stroke	Compatible Controllers	Cable Length	Option
		I: Incremental * The Simple absolute encoder is also considered type "I".	10 : 10W Servo Motor	4 : Ball screw 4mm 2 : Ball screw 2mm 1 : Ball screw 1mm 4S : lead screw 4mm 2S : lead screw 2mm 1S : lead screw 1mm	25 :25mm 50 :50mm	A1 : ACON RACON ASEL A3 : AMEC ASEP	N : None P : 1m S : 3m M : 5m X ☐☐ : Custom Length	K1~3 : Connector cable exit direction LA : Power-saving

* See page Pre-35 for an explanation of the naming convention.

Power-saving

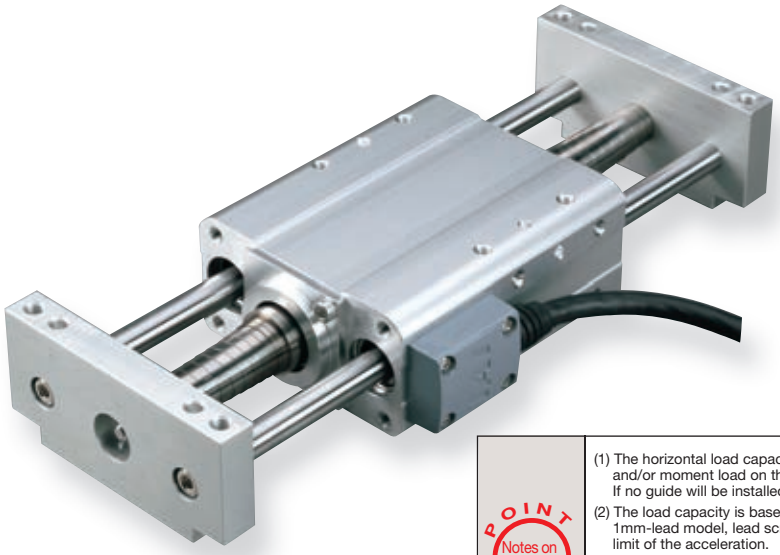

Technical References P. A-5

POINT Notes on Selection

(1) The horizontal load capacity is based on the use of a guide to prevent any radial and/or moment load on the rod.
If no guide will be installed, see the Tip Load vs. Service Life graph → page (A-82).
(2) The load capacity is based on operation at an acceleration of 0.3G (0.2G for the 1mm-lead model, lead screw model, or when used vertically). This is the upper limit of the acceleration.
(3) The values for the vertical load capacity are based on a setup in which the actuator is secured and the side bracket is moved. Please note that moving the actuator against the secured side bracket is not possible.
(4) If the actuator is used vertically, pay attention to rod contact because the rod will come down when the power is turned off.

Actuator Specification Table

■Leads and Payloads

Model	Motor output (W)	Feed screw	Lead (mm)	Maximum payload Horizontal (kg)	Maximum payload Vertical (kg)	Rated thrust (N)	Positioning Repeatability (mm)	Stroke (mm)
RCA2-SD3NA-I-10-4-①-②-③-④	10	Ball screw	4	0.75	0.25 (*)	42.7	±0.02	25 50
RCA2-SD3NA-I-10-2-①-②-③-④			2	1.5	0.5 (*)	85.5		
RCA2-SD3NA-I-10-1-①-②-③-④			1	3	1 (*)	170.9		
RCA2-SD3NA-I-10-4S-①-②-③-④	10	Lead screw	4	0.25	0.125 (*)	25.1	±0.05	25 50
RCA2-SD3NA-I-10-2S-①-②-③-④			2	0.5	0.25 (*)	50.3		
RCA2-SD3NA-I-10-1S-①-②-③-④			1	1	0.5 (*)	100.5		

Legend ① Stroke ② Compatible Controllers ③ Cable length ④ Option

(*) When the main unit side is fixed

■Stroke and Maximum Speed

Lead		Stroke 25 (mm)	Stroke 50 (mm)
Ball screw	4	200	
	2	100	
	1	50	
Lead screw	4	200	
	2	100	
	1	50	

(Unit = mm/s)

Cable List

Type	Cable Symbol	
Standard (Robot Cables)	**P** (1m)	
	S (3m)	
	M (5m)	
Special Lengths	**X06** (6m) ~ **X10** (10m)	
	X11 (11m) ~ **X15** (15m)	
	X16 (16m) ~ **X20** (20m)	

* The RCA2 comes standard with a robot cable.
* See page A-39 for cables for maintenance.

Actuator Specifications

Item		Description
Drive System		Ball screw/Lead screw, Ø4 mm, rolled C10
Lost motion		Ball screw: 0.1 mm or less/Lead screw: 0.3 mm or less (default value)
Frame		Material: Aluminum, white alumite treated
Ambient operating temperature, humidity		0 to 40 ˚C, 85% RH or less (Non-condensing)
Service life	Lead screw specification	Horizontal specification: 10 million cycles, Vertical specification: 5 million cycles
	Ball screw specification	5000 km

Option List

Name	Option Code	See Page	
Cable exit from left	**K1**	→ A-32	
Cable exit from right	**K3**	→ A-32	
Power-saving	**LA**	→ A-32	

Dimensions

CAD drawings can be downloaded from IAI website. www.robocylinder.de

For Special Orders P. A-9

2/3D CAD

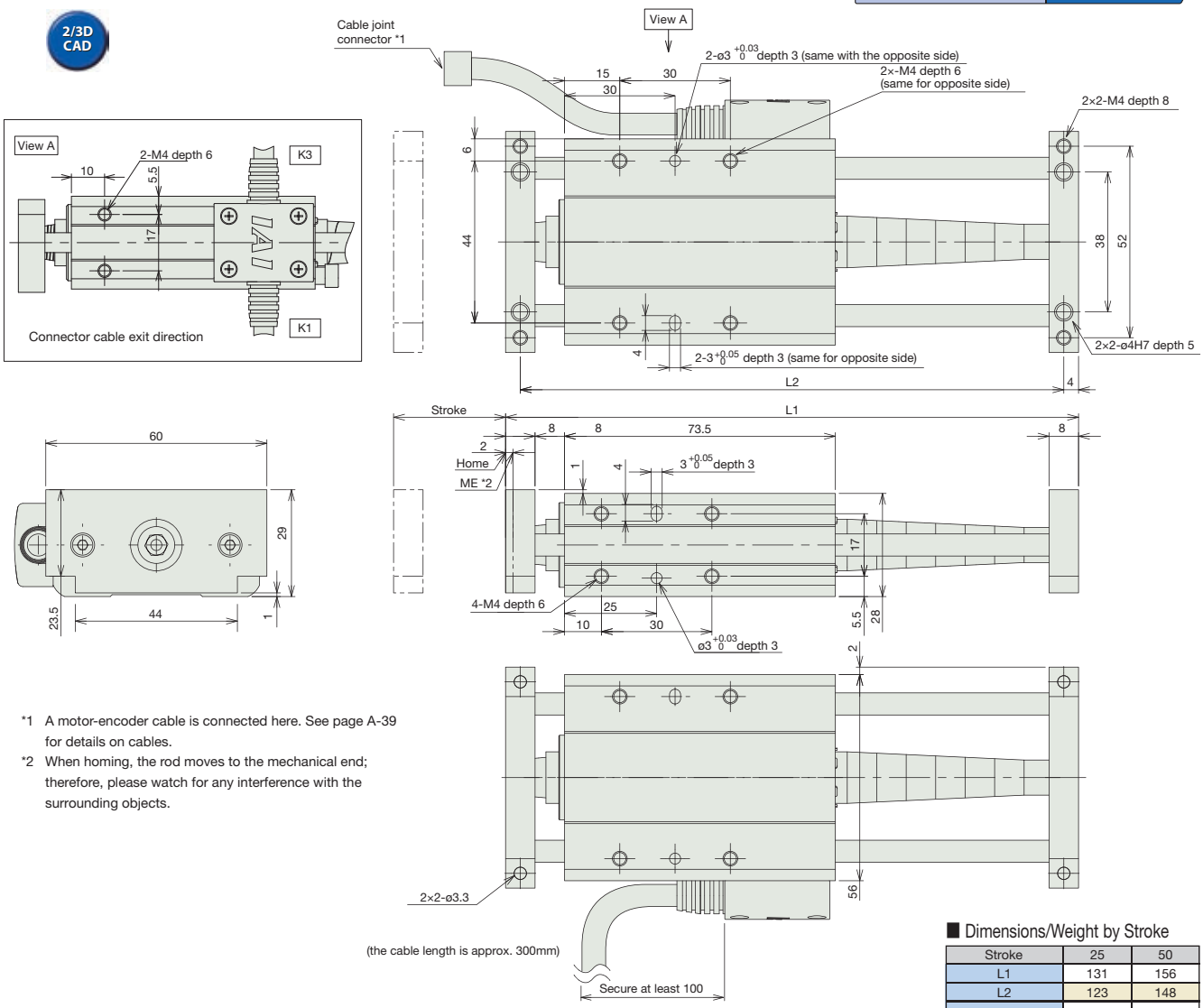

*1 A motor-encoder cable is connected here. See page A-39 for details on cables.

*2 When homing, the rod moves to the mechanical end; therefore, please watch for any interference with the surrounding objects.

Dimensions/Weight by Stroke

Stroke	25	50
L1	131	156
L2	123	148
Weight (kg)	0.48	0.5

Compatible Controllers

The RCA2 series actuators can operate with the controllers below. Select the controller according to your usage.

Name	External View	Model	Description	Max. Positioning Points	Input Voltage	Power Supply Capacity		See Page
Solenoid Valve Type		AMEC-C-10I①-NP-2-2	Easy-to-use controller, even for beginners	3 points	AC115V / AC230V* *planned	2.4A rated		→ P477
		ASEP-C-10I①-NP-2-0	Operable with same signal as solenoid valve. Supports both single and double solenoid types. No homing necessary with simple absolute type.		DC24V	(Standard) 1.3A rated 4.4A max. (Power-saving) 1.3A rated 2.5A max.		→ P487
Splash-Proof Solenoid Valve Type		ASEP-CW-10I①-NP-2-0						
Positioner Type		ACON-C-10I①-NP-2-0	Positioning is possible for up to 512 points	512 points				→ P535
Safety-Compliant Positioner Type		ACON-CG-10I①-NP-2-0						
Pulse Train Input Type (Differen tial Line Driver)		ACON-PL-10I①-NP-2-0	Pulse train input type with differential line driver support	(–)				
Pulse Train Input Type (Open Collector)		ACON-PO-10I①-NP-2-0	Pulse train input type with open collector support					
Serial Communication Type		ACON-SE-10I①-N-0-0	Dedicated to serial communication	64 points				
Field Network Type		RACON-10①	Dedicated to field network	768 points				→ P503
Program Control Type		ASEL-C-1-10I①-NP-2-0	Programmed operation is possible Operation is possible on up to 2 axes	1500 points				→ P567

* This is for the single-axis ASEL.
* ① is a placeholder for the code "LA" if the power-saving option is specified.

Slider Type
Mini
Standard
Controllers Integrated
Rod Type
Mini
Standard
Controllers Integrated
Table/Arm /Flat Type
Mini
Standard
Gripper/ Rotary Type
Linear Motor Type
Cleanroom Type
Splash Proof
Controllers
PMEC /AMEC
PSEP /ASEP
ROBO NET
ERC2
PCON
ACON
SCON
PSEL
ASEL
SSEL
XSEL
Pulse Motor
Servo Motor (24V)
Servo Motor (230V)
Linear Motor

RCA2-SD4NA

RoboCylinder Mini Rod Type Short-Length Slide Unit Type with Double Guide
72mm Width 24V Servo Motor Ball Screw/Lead Screw

■ Configuration: **RCA2** – **SD4NA** – **I** – **20** – ☐ – ☐ – ☐ – ☐ – ☐ – ☐

Series	Type	Encoder	Motor	Lead	Stroke	Compatible Controllers	Cable Length	Option
		I: Incremental * The Simple absolute encoder is also considered type "I".	20 : 20W Servo Motor	6 : 6mm ball screw 4 : 4mm ball screw 2 : 2mm ball screw 6S : 6mm lead screw 4S : 4mm lead screw 2S : 2mm lead screw	25 : 25mm 50 : 50mm 75 : 75mm	A1 : ACON RACON ASEL A3 : AMEC ASEP	N : None P : 1m S : 3m M : 5m X ☐☐ : Custom Length	K1~3 : Connector cable exit direction LA : Power-saving

* See page Pre-35 for an explanation of the naming convention.

Power-saving

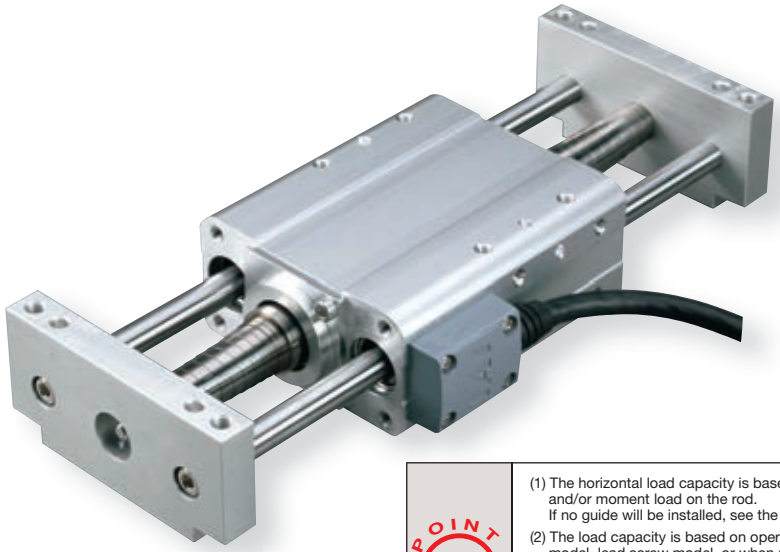

Technical References P. A-5

POINT Notes on Selection

(1) The horizontal load capacity is based on the use of a guide to prevent any radial and/or moment load on the rod.
If no guide will be installed, see the Tip Load vs. Service Life graph → page (A-82).
(2) The load capacity is based on operation at an acceleration of 0.3G (0.2G for the 2mm-lead model, lead screw model, or when used vertically). This is the upper limit of the acceleration.
(3) The values for the vertical load capacity are based on a setup in which the actuator is secured and the side bracket is moved. Please note that moving the actuator against the secured side bracket is not possible.
(4) If the actuator is used vertically, pay attention to rod contact because the rod will come down when the power is turned off.

Actuator Specifications

■ Lead and Load Capacity

Model	Motor Output (W)	Feed Screw	Lead (mm)	Max. Load Capacity Horizontal (kg)	Max. Load Capacity Vertical (kg)	Rated Thrust (N)	Positioning Repeatability (mm)	Stroke (mm)
RCA2-SD4NA-I-20-6- ① - ② - ③ - ④	20	Ball Screw	6	2	0.5 (*1)	33.8	±0.02	25 50 75
RCA2-SD4NA-I-20-4- ① - ② - ③ - ④			4	3	0.75 (*1)	50.7		
RCA2-SD4NA-I-20-2- ① - ② - ③ - ④			2	6	1.5 (*1)	101.5		
RCA2-SD4NA-I-20-6S- ① - ② - ③ - ④	20	Lead Screw	6	0.25	0.125 (*1)	19.9	±0.05	25 50 75
RCA2-SD4NA-I-20-4S- ① - ② - ③ - ④			4	0.5	0.25 (*1)	29.8		
RCA2-SD4NA-I-20-2S- ① - ② - ③ - ④			2	1	0.5 (*1)	59.7		

Legend ① Stroke ② Compatible controller ③ Cable length ④ Options

(*1) When the main unit is fixed

■ Stroke and Maximum Speed

Lead		Stroke 25 (mm)	Stroke 50 ~ 75 (mm)
Ball Screw	6	240 <200>	300
	4	200	200
	2	100	100
Lead Screw	6	200	300
	4	200	200
	2	100	100

* The values enclosed in < > apply for vertical usage. (Unit: mm/s)

Cable List

Type	Cable Symbol	
Standard (Robot Cables)	**P** (1m)	
	S (3m)	
	M (5m)	
Special Lengths	**X06** (6m) ~ **X10** (10m)	
	X11 (11m) ~ **X15** (15m)	
	X16 (16m) ~ **X20** (20m)	

* The RCA2 comes standard with a robot cable.
* See page A-39 for cables for maintenance.

Actuator Specifications

Item		Description
Drive System		Ball screw/Lead screw, Ø6 mm, rolled C10
Lost motion		Ball screw: 0.1 mm or less/Lead screw: 0.3 mm or less (default value)
Frame		Material: Aluminum, white alumite treated
Ambient operating temperature, humidity		0 to 40 ˚C, 85% RH or less (Non-condensing)
Service life	Lead screw specification	Horizontal specification: 10 million cycles, Vertical specification: 5 million cycles
	Ball screw specification	5000 km

Option List

Name	Option Code	See Page	
Cable exit from left	**K1**	→ A-32	
Cable exit from right	**K3**	→ A-32	
Power-saving	**LA**	→ A-32	

Dimensions

CAD drawings can be downloaded from IAI website. www.robocylinder.de

For Special Orders P. A-9

2/3D CAD

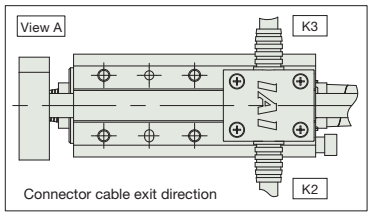

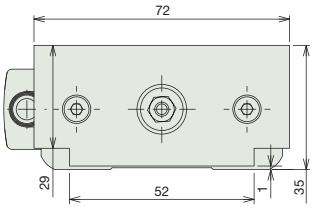

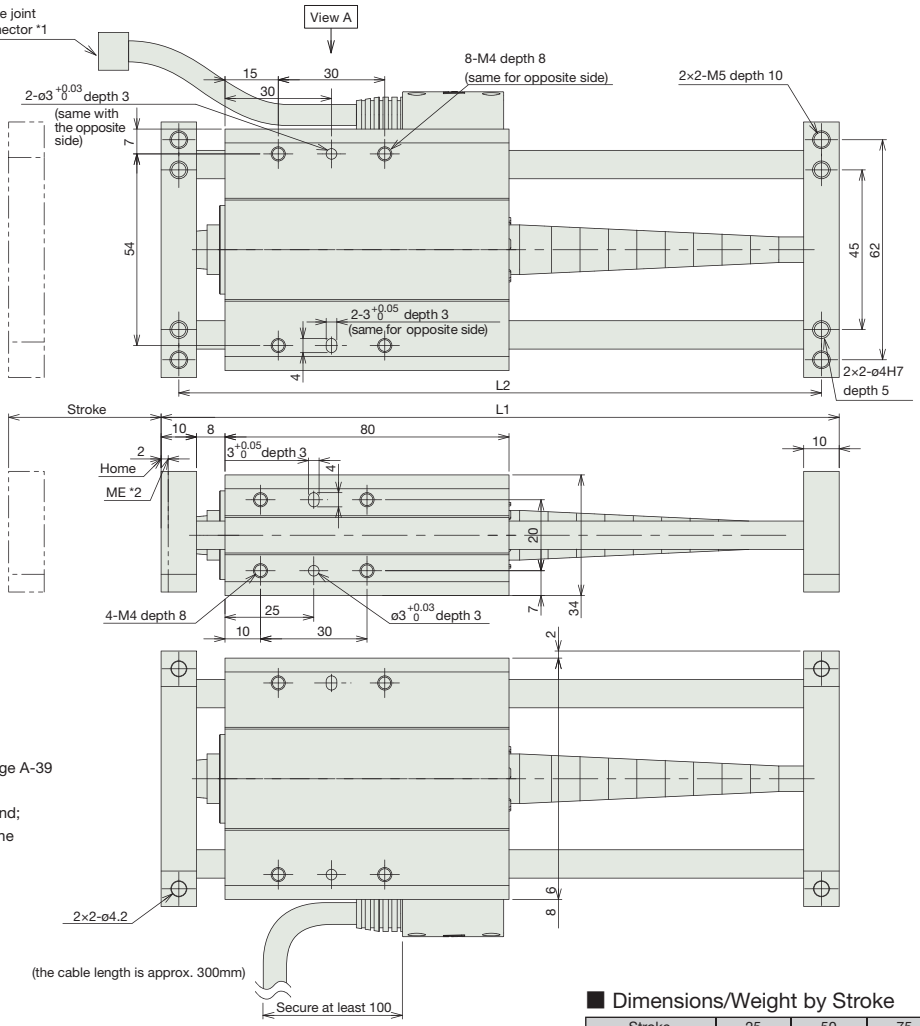

*1 A motor-encoder cable is connected here. See page A-39 for details on cables.

*2 When homing, the rod moves to the mechanical end; therefore, please watch for any interference with the surrounding objects.

Dimensions/Weight by Stroke

Stroke	25	50	75
L1	141	166	191
L2	131	156	181
Weight (kg)	0.73	0.75	0.77

Compatible Controllers

The RCA2 series actuators can operate with the controllers below. Select the controller according to your usage.

Name	External View	Model	Description	Max. Positioning Points	Input Voltage	Power Supply Capacity		See Page
Solenoid Valve Type		AMEC-C-20I①-NP-2-2	Easy-to-use controller, even for beginners	3 points	AC115V / AC230V* *planned	2.4A rated		→ P477
		ASEP-C-20I①-NP-2-0	Operable with same signal as solenoid valve. Supports both single and double solenoid types. No homing necessary with simple absolute type.		DC24V	(Standard) 1.3A rated 4.4A max. (Power-saving) 1.3A rated 2.5A max.		→ P487
Splash-Proof Solenoid Valve Type		ASEP-CW-20I①-NP-2-0						
Positioner Type		ACON-C-20I①-NP-2-0	Positioning is possible for up to 512 points	512 points				→ P535
Safety-Compliant Positioner Type		ACON-CG-20I①-NP-2-0						
Pulse Train Input Type (Differen tial Line Driver)		ACON-PL-20I①-NP-2-0	Pulse train input type with differential line driver support	(–)				
Pulse Train Input Type (Open Collector)		ACON-PO-20I①-NP-2-0	Pulse train input type with open collector support					
Serial Communication Type		ACON-SE-20I①-N-0-0	Dedicated to serial communication	64 points				
Field Network Type		RACON-20①	Dedicated to field network	768 points				→ P503
Program Control Type		ASEL-C-1-20I①-NP-2-0	Programmed operation is possible Operation is possible on up to 2 axes	1500 points				→ P567

* This is for the single-axis ASEL.
* ① is a placeholder for the code "LA" if the power-saving option is specified.

Slider Type
Mini
Standard
Controllers Integrated
Rod Type
Mini
Standard
Controllers Integrated
Table/Arm /Flat Type
Mini
Standard
Gripper/ Rotary Type
Linear Motor Type
Cleanroom Type
Splash Proof
Controllers
PMEC /AMEC
PSEP /ASEP
ROBO NET
ERC2
PCON
ACON
SCON
PSEL
ASEL
SSEL
XSEL
Pulse Motor
Servo Motor (24V)
Servo Motor (230V)
Linear Motor

RCA2-TCA3NA

RoboCylinder Mini Table Type Short-Length Compact Type 32mm Width
24V Servo Motor Ball Screw/Lead Screw

■ Configuration: **RCA2 – TCA3NA – I – 10 – ☐ – ☐ – ☐ – ☐ – ☐ – ☐**

Series	Type	Encoder	Motor	Lead	Stroke	Compatible Controllers	Cable Length	Option
		I: Incremental * The simple absolute encoder is also considered type "I".	10: 10W Servo motor	4 : Ball screw 4mm 2 : Ball screw 2mm 1 : Ball screw 1mm 4S : lead screw 4mm 2S : lead screw 2mm 1S : lead screw 1mm	30 : 30mm 50 : 50mm	A1: ACON RACON ASEL A3: AMEC ASEP	N : None P : 1m S : 3m M : 5m X ☐☐ : Custom Length	K1~3 : Connector cable exit direction LA : Power-saving

* See page Pre-35 for an explanation of the naming convention.

Power-saving

Technical References P. A-5

POINT Notes on Selection

(1) The payload is the value when the actuator is operated at an acceleration of 0.3 G (0.2G for lead 1, if used vertically and for lead screw specification). The acceleration limit is the value indicated above.

(2) If the actuator is used vertically, pay attention to rod contact because the rod will come down when the power is turned off.

Actuator Specifications

■ Lead and Load Capacity

Model	Motor output (W)	Feed screw	Lead (mm)	Maximum payload Horizontal (kg)	Maximum payload Vertical (kg)	Rated thrust (N)	Positioning Repeatability (mm)	Stroke (mm)
RCA2-TCA3NA-I-10-4-①-②-③-④	10	Ball screw	4	0.75	0.25	42.7	±0.02	30 50
RCA2-TCA3NA-I-10-2-①-②-③-④			2	1.5	0.5	85.5		
RCA2-TCA3NA-I-10-1-①-②-③-④			1	3	1	170.9		
RCA2-TCA3NA-I-10-4S-①-②-③-④	10	Lead screw	4	0.25	0.125	25.1	±0.05	30 50
RCA2-TCA3NA-I-10-2S-①-②-③-④			2	0.5	0.25	50.3		
RCA2-TCA3NA-I-10-1S-①-②-③-④			1	1	0.5	100.5		

Legend ① Stroke ② Compatible Controllers ③ Cable length ④ Option

■ Stroke and Maximum Speed

Lead \ Stroke		30 (mm)	50 (mm)
Ball screw	4	200	
	2	100	
	1	50	
Lead screw	4	200	
	2	100	
	1	50	

(Unit = mm/s)

Cable List

Type	Cable Symbol	
Standard (Robot Cables)	**P** (1m)	
	S (3m)	
	M (5m)	
Special Lengths	**X06** (6m) ~ **X10** (10m)	
	X11 (11m) ~ **X15** (15m)	
	X16 (16m) ~ **X20** (20m)	

* The RCA2 comes standard with a robot cable.
* See page A-39 for cables for maintenance.

Actuator Specifications

Item		Description
Drive System		Ball screw/Lead screw ø4mm C10 grade
Lost Motion		0.3mm or less (initial value)
Frame		Material: Aluminum (white alumite treated)
Allowable Dynamic Moment (Note)		Ma: 9.9 N•m Mb: 9.9 N•m Mc: 3.3 N•m
Ambient Operating Temp./Humidity		0~40°C, 85% RH or less (non-condensing)
Service Life	Lead screw specification	Horizontal specification: 10 million cycles Vertical specification: 5 million cycles
	Ball screw specification	2mm-/4mm-lead model: 5000 km or 50 million cycles 1mm-lead model: 3000 km or 50 million cycles

(Note) Based on a 5000 or 3000 km service life set for the guide.

Option List

Name	Option Code	See Page	
Cable exit from left	**K1**	→ A-32	
Cable exit from front	**K2**	→ A-32	
Cable exit from right	**K3**	→ A-32	
Power-saving	**LA**	→ A-32	

Dimensions

CAD drawings can be downloaded from IAI website. www.robocylinder.de

For Special Orders P. A-9

2/3D CAD

*1 The motor-encoder cable is connected here. See page A-39 for details on cables.
*2 When homing, the table moves to the mechanical end; therefore, please watch for any interference with the surrounding objects.

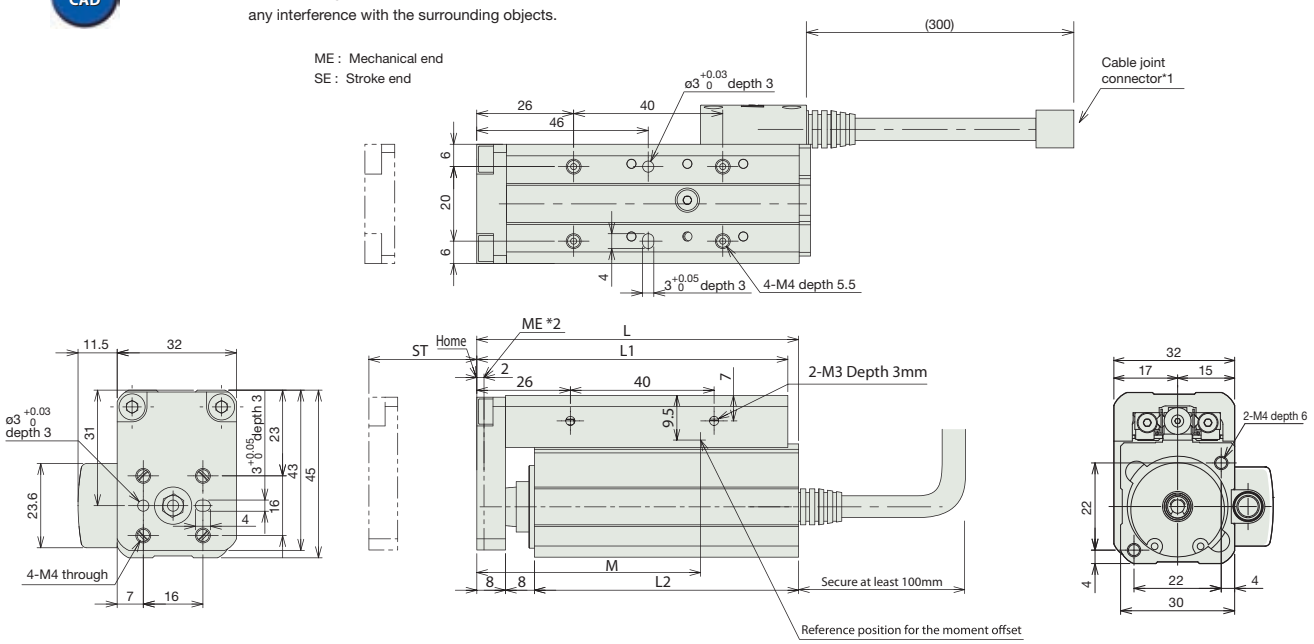

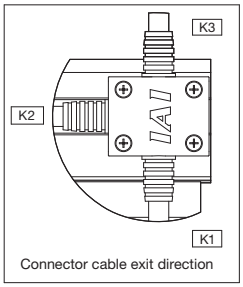

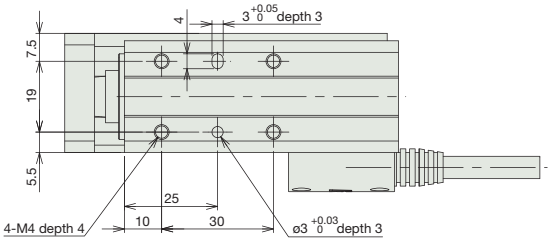

Dimensions/Weight by Stroke

Stroke	30	50
L	89.5	109.5
L1	86.5	106.5
L2	73.5	93.5
M	64	84
Weight (kg)	0.37	0.44

Compatible Controllers

The RCA2 series actuators can operate with the controllers below. Select the controller according to your usage.

Name	External View	Model	Description	Max. Positioning Points	Input Voltage	Power Supply Capacity		See Page
Solenoid Valve Type		AMEC-C-10I①-NP-2-2	Easy-to-use controller, even for beginners	3 points	AC115V / AC230V* *planned	2.4A rated		→ P477
		ASEP-C-10I①-NP-2-0	Operable with same signal as solenoid valve. Supports both single and double solenoid types. No homing necessary with simple absolute type.		DC24V	(Standard) 1.3A rated 4.4A max. (Power-saving) 1.3A rated 2.5A max.		→ P487
Splash-Proof Solenoid Valve Type		ASEP-CW-10I①-NP-2-0						
Positioner Type		ACON-C-10I①-NP-2-0	Positioning is possible for up to 512 points	512 points				→ P535
Safety-Compliant Positioner Type		ACON-CG-10I①-NP-2-0						
Pulse Train Input Type (Differential Line Driver)		ACON-PL-10I①-NP-2-0	Pulse train input type with differential line driver support	(–)				
Pulse Train Input Type (Open Collector)		ACON-PO-10I①-NP-2-0	Pulse train input type with open collector support					
Serial Communication Type		ACON-SE-10I①-N-0-0	Dedicated to serial communication	64 points				
Field Network Type		RACON-10①	Dedicated to field network	768 points				→ P503
Program Control Type		ASEL-C-1-10I①-NP-2-0	Programmed operation is possible Operation is possible on up to 2 axes	1500 points				→ P567

* This is for the single-axis ASEL.
* ① is a placeholder for the code "LA" if the power-saving option is specified.

Slider Type
Mini
Standard
Controllers Integrated
Rod Type
Mini
Standard
Controllers Integrated
Table/Arm /Flat Type
Mini
Standard
Gripper/ Rotary Type
Linear Motor Type
Cleanroom Type
Splash Proof
Controllers
PMEC /AMEC
PSEP /ASEP
ROBO NET
ERC2
PCON
ACON
SCON
PSEL
ASEL
SSEL
XSEL
Pulse Motor
Servo Motor (24V)
Servo Motor (230V)
Linear Motor

RCA2-TCA4NA

RoboCylinder Mini Table Type Short-Length Compact Type 36mm Width
24V Servo Motor Ball Screw/Lead Screw

■ Configuration: **RCA2 – TCA4NA – I – 20 – ☐ – ☐ – ☐ – ☐ – ☐ – ☐**

Series	Type	Encoder	Motor	Lead	Stroke	Compatible Controllers	Cable Length	Option
		I: Incremental * The simple absolute encoder is also considered type "I".	20: 20W Servo motor	6 : 6mm ball screw 4 : 4mm ball screw 2 : 2mm ball screw 6S : 6mm lead screw 4S : 4mm lead screw 2S : 2mm lead screw	30: 30mm 50: 50mm	A1: ACON RACON ASEL A3: AMEC ASEP	N : None P : 1m S : 3m M : 5m X ☐☐ : Custom Length	K1~3 : Connector cable exit direction LA : Power-saving

* See page Pre-35 for an explanation of the naming convention.

Power-saving

Technical References P. A-5

POINT Notes on Selection

(1) The payload is the value when the actuator is operated at an acceleration of 0.3 G (0.2G for lead 2, if used vertically and for lead screw specification). The acceleration limit is the value indicated above.

(2) If the actuator is used vertically, pay attention to rod contact because the rod will come down when the power is turned off.

Actuator Specifications

■ Lead and Load Capacity

Model	Motor Output (W)	Feed Screw	Lead (mm)	Max. Load Capacity Horizontal (kg)	Max. Load Capacity Vertical (kg)	Rated Thrust (N)	Positioning Repeatability (mm)	Stroke (mm)
RCA2-TCA4NA-I-20-6- ① - ② - ③	20	Ball screw	6	2	0.5	33.8	±0.02	30 50
RCA2-TCA4NA-I-20-4- ① - ② - ③			4	3	0.75	50.7		
RCA2-TCA4NA-I-20-2- ① - ② - ③			2	6	1.5	101.5		
RCA2-TCA4NA-I-20-6S- ① - ② - ③	20	Lead screw	6	0.25	0.125	19.9	±0.05	30 50
RCA2-TCA4NA-I-20-4S- ① - ② - ③			4	0.5	0.25	29.8		
RCA2-TCA4NA-I-20-2S- ① - ② - ③			2	1	0.5	59.7		

Legend ① Compatible controller ② Cable length ③ Options

■ Stroke and Maximum Speed

Lead		Stroke 30 (mm)	Stroke 50 (mm)
Ball screw	6	270 <220>	300
	4	200	
	2	100	
Lead screw	6	220	300
	4	200	
	2	100	

* The values enclosed in "< >" apply to vertical usage. (Unit: mm/s)

Cable List

Type	Cable Symbol	
Standard (Robot Cables)	**P** (1m)	
	S (3m)	
	M (5m)	
Special Lengths	**X06** (6m) ~ **X10** (10m)	
	X11 (11m) ~ **X15** (15m)	
	X16 (16m) ~ **X20** (20m)	

* The RCA2 comes standard with a robot cable.
* See page A-39 for cables for maintenance.

Option List

Name	Option Code	See Page	
Cable exit from left	**K1**	→ A-32	
Cable exit from front	**K2**	→ A-32	
Cable exit from right	**K3**	→ A-32	
Power-saving	**LA**	→ A-32	

Actuator Specifications

Item		Description
Drive System		Ball screw/Lead screw ø6mm C10 grade
Lost Motion		Ball screw: 0.1mm or less/Lead screw: 0.3mm or less (initial value)
Frame		Material: Aluminum (white alumite treated)
Allowable Dynamic Moment (Note)		Ma: 9.9 N•m Mb: 9.9 N•m Mc: 3.3 N•m
Ambient Operating Temp./Humidity		0~40°C, 85% RH or less (non-condensing)
Service Life	Lead screw specification	Horizontal specification: 10 million cycles Vertical specification: 5 million cycles
	Ball screw specification	5000 km or 50 million cycles

(Note) Based on a 5000 km service life set for the guide.

Dimensions

CAD drawings can be downloaded from IAI website. www.robocylinder.de

For Special Orders P. A-9

2/3D CAD

*1 The motor-encoder cable is connected here. See page A-39 for details on cables.
*2 When homing, the table moves to the mechanical end; therefore, please watch for any interference with the surrounding objects.

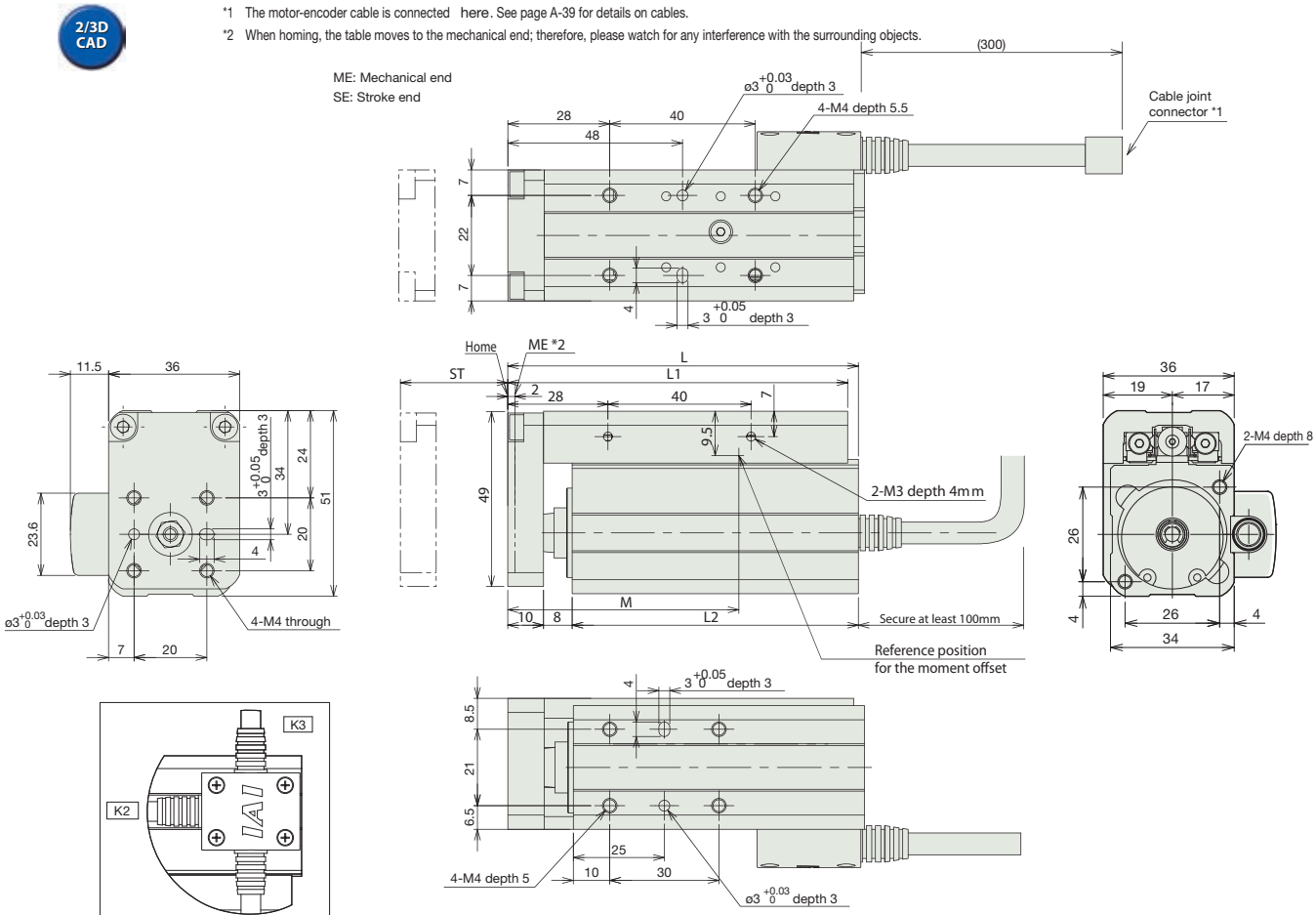

Dimensions/Weight by Stroke

Stroke	30	50
L	98	118
L1	95	115
L2	80	100
M	66	86
Weight (kg)	0.48	0.60

Compatible Controllers

The RCA2 series actuators can operate with the controllers below. Select the controller according to your usage.

Name	External View	Model	Description	Max. Positioning Points	Input Voltage	Power Supply Capacity		See Page
Solenoid Valve Type		AMEC-C-20I①-NP-2-2	Easy-to-use controller, even for beginners	3 points	AC115V / AC230V* *planned	2.4A rated		→ P477
		ASEP-C-20I①-NP-2-0	Operable with same signal as solenoid valve. Supports both single and double solenoid types. No homing necessary with simple absolute type.		DC24V	(Standard) 1.3A rated 4.4A max. (Power-saving) 1.3A rated 2.5A max.		→ P487
Splash-Proof Solenoid Valve Type		ASEP-CW-20I①-NP-2-0						
Positioner Type		ACON-C-20I①-NP-2-0	Positioning is possible for up to 512 points	512 points				→ P535
Safety-Compliant Positioner Type		ACON-CG-20I①-NP-2-0						
Pulse Train Input Type (Differen tial Line Driver)		ACON-PL-20I①-NP-2-0	Pulse train input type with differential line driver support	(–)				
Pulse Train Input Type (Open Collector)		ACON-PO-20I①-NP-2-0	Pulse train input type with open collector support					
Serial Communication Type		ACON-SE-20I①-N-0-0	Dedicated to serial communication	64 points				
Field Network Type		RACON-20①	Dedicated to field network	768 points				→ P503
Program Control Type		ASEL-C-1-20I①-NP-2-0	Programmed operation is possible Operation is possible on up to 2 axes	1500 points				→ P567

* This is for the single-axis ASEL.
* ① is a placeholder for the code "LA" if the power-saving option is specified.

Slider Type
Mini
Standard
Controllers Integrated
Rod Type
Mini
Standard
Controllers Integrated
Table/Arm /Flat Type
Mini
Standard
Gripper/ Rotary Type
Linear Motor Type
Cleanroom Type
Splash Proof
Controllers
PMEC /AMEC
PSEP /ASEP
ROBO NET
ERC2
PCON
ACON
SCON
PSEL
ASEL
SSEL
XSEL
Pulse Motor
Servo Motor (24V)
Servo Motor (230V)
Linear Motor

RCA2-TWA3NA

RoboCylinder Mini Table Type Short-Length Wide Type 50mm Width
24V Servo Motor Ball Screw/Lead Screw

■ Configuration: **RCA2—TWA3NA — I — 10 — ☐ — ☐ — ☐ — ☐ — ☐ — ☐**

Series	Type	Encoder	Motor	Lead	Stroke	Compatible Controllers	Cable Length	Option
		I: Incremental * The simple absolute encoder is also considered type "I".	10: 10W Servo motor	4 : Ball screw 4mm 2 : Ball screw 2mm 1 : Ball screw 1mm 4S : lead screw 4mm 2S : lead screw 2mm 1S : lead screw 1mm	30 : 30mm 50 : 50mm	A1: ACON RACON ASEL A3: AMEC ASEP	N : None P : 1m S : 3m M : 5m X ☐☐ : Custom Length	K1~3 : Connector cable exit direction LA : Power-saving

* See page Pre-35 for an explanation of the naming convention.

Power-saving

Technical References P. A-5

POINT Notes on Selection

(1) The payload is the value when the actuator is operated at an acceleration of 0.3 G (0.2G for lead 1, if used vertically and for lead screw specification). The acceleration limit is the value indicated above.

(2) If the actuator is used vertically, pay attention to rod contact because the rod will come down when the power is turned off.

Actuator Specifications

■ Lead and Load Capacity

Model	Motor output (W)	Feed screw	Lead (mm)	Maximum payload Horizontal (kg)	Maximum payload Vertical (kg)	Rated thrust (N)	Positioning Repeatability (mm)	Stroke (mm)
RCA2-TWA3NA-I-10-4-①-②-③-④	10	Ball screw	4	0.75	0.25	42.7	±0.02	30 50
RCA2-TWA3NA-I-10-2-①-②-③-④			2	1.5	0.5	85.5		
RCA2-TWA3NA-I-10-1-①-②-③-④			1	3	1	170.9		
RCA2-TWA3NA-I-10-4S-①-②-③-④	10	Lead screw	4	0.25	0.125	25.1	±0.05	30 50
RCA2-TWA3NA-I-10-2S-①-②-③-④			2	0.5	0.25	50.3		
RCA2-TWA3NA-I-10-1S-①-②-③-④			1	1	0.5	100.5		

Legend ① Stroke ② Compatible Controllers ③ Cable length ④ Option

■ Stroke and Maximum Speed

	Lead \ Stroke	30 (mm)	50 (mm)
Ball screw	4	200	
	2	100	
	1	50	
Lead screw	4	200	
	2	100	
	1	50	

(Unit = mm/s)

Cable List

Type	Cable Symbol	
Standard (Robot Cables)	**P** (1m)	
	S (3m)	
	M (5m)	
Special Lengths	**X06** (6m) ~ **X10** (10m)	
	X11 (11m) ~ **X15** (15m)	
	X16 (16m) ~ **X20** (20m)	

* The RCA2 comes standard with a robot cable.
* See page A-39 for cables for maintenance.

Actuator Specifications

Item		Description
Drive System		Ball screw/Lead screw ø4mm C10 grade
Lost Motion		0.3mm or less (initial value)
Frame		Material: Aluminum (white alumite treated)
Allowable Dynamic Moment (Note)		Ma: 9.9 N•m Mb: 9.9 N•m Mc: 9.4 N•m
Ambient Operating Temp./Humidity		0~40°C, 85% RH or less (non-condensing)
Service Life	Lead screw specification	Horizontal specification: 10 million cycles Vertical specification: 5 million cycles
	Ball screw specification	2mm-/4mm-lead model: 5000 km or 50 million cycles 1mm-lead model: 3000 km or 50 million cycles

(Note) Based on a 5000 or 3000 km service life set for the guide.

Option List

Name	Option Code	See Page	
Cable exit from left	**K1**	→ A-32	
Cable exit from front	**K2**	→ A-32	
Cable exit from right	**K3**	→ A-32	
Power-saving	**LA**	→ A-32	

Dimensions

CAD drawings can be downloaded from IAI website. www.robocylinder.de

For Special Orders P. A- 9

2/3D CAD

*1 The motor-encoder cable is connected here. See page A-39 for details on cables.
*2 When homing, the table moves to the mechanical end; therefore, please watch for any interference with the surrounding objects.

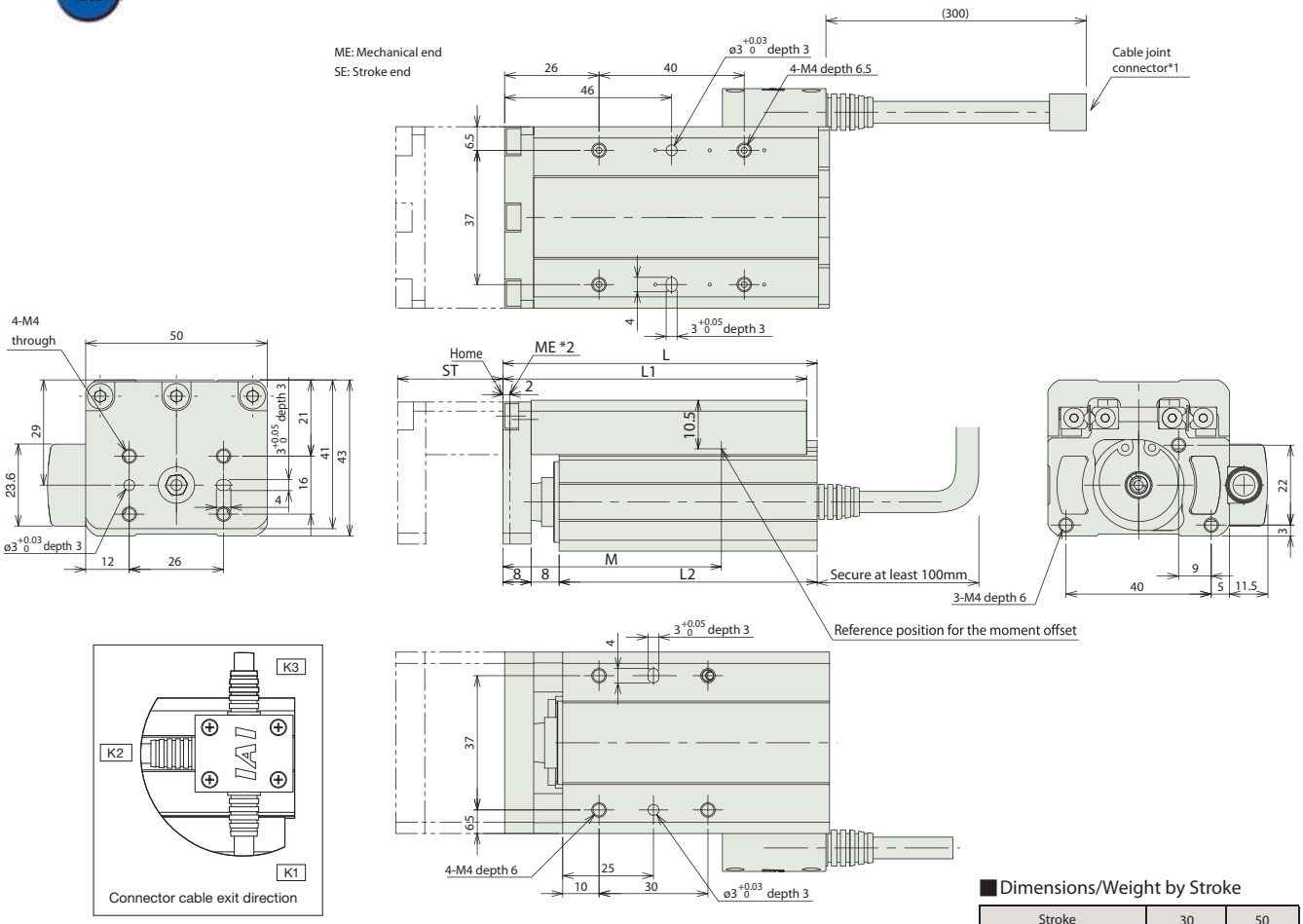

Dimensions/Weight by Stroke

Stroke	30	50
L	89.5	109.5
L1	86.5	106.5
L2	73.5	93.5
M	64	84
Weight (kg)	0.52	0.58

Compatible Controllers

The RCA2 series actuators can operate with the controllers below. Select the controller according to your usage.

Name	External View	Model	Description	Max. Positioning Points	Input Voltage	Power Supply Capacity		See Page
Solenoid Valve Type		AMEC-C-10I①-NP-2-2	Easy-to-use controller, even for beginners	3 points	AC115V / AC230V* *planned	2.4A rated		→ P477
		ASEP-C-10I①-NP-2-0	Operable with same signal as solenoid valve. Supports both single and double solenoid types. No homing necessary with simple absolute type.		DC24V	(Standard) 1.3A rated 4.4A max. (Power-saving) 1.3A rated 2.5A max.		→ P487
Splash-Proof Solenoid Valve Type		ASEP-CW-10I①-NP-2-0						
Positioner Type		ACON-C-10I①-NP-2-0	Positioning is possible for up to 512 points	512 points				→ P535
Safety-Compliant Positioner Type		ACON-CG-10I①-NP-2-0						
Pulse Train Input Type (Differen tial Line Driver)		ACON-PL-10I①-NP-2-0	Pulse train input type with differential line driver support	(–)				
Pulse Train Input Type (Open Collector)		ACON-PO-10I①-NP-2-0	Pulse train input type with open collector support					
Serial Communication Type		ACON-SE-10I①-N-0-0	Dedicated to serial communication	64 points				
Field Network Type		RACON-10①	Dedicated to field network	768 points				→ P503
Program Control Type		ASEL-C-1-10I①-NP-2-0	Programmed operation is possible Operation is possible on up to 2 axes	1500 points				→ P567

* This is for the single-axis ASEL.
* ① is a placeholder for the code "LA" if the power-saving option is specified.

Slider Type
Mini
Standard
Controllers Integrated
Rod Type
Mini
Standard
Controllers Integrated
Table/Arm /Flat Type
Mini
Standard
Gripper/ Rotary Type
Linear Motor Type
Cleanroom Type
Splash Proof
Controllers
PMEC /AMEC
PSEP /ASEP
ROBO NET
ERC2
PCON
ACON
SCON
PSEL
ASEL
SSEL
XSEL
Pulse Motor
Servo Motor (24V)
Servo Motor (230V)
Linear Motor

RCA2-TWA4NA

RoboCylinder Mini Table Type Short-Length Wide Type 58mm Width
24V Servo Motor Ball Screw/Lead Screw

■ Configuration: **RCA2** – **TWA4N** – **I** – **20** – □ – □ – □ – □ – □ – □

Series	Type	Encoder	Motor	Lead	Stroke	Compatible Controllers	Cable Length	Option
		I: Incremental * The simple absolute encoder is also considered type "I".	20: 20W Servo motor	6 : 6mm ball screw 4 : 4mm ball screw 2 : 2mm ball screw 6S : 6mm lead screw 4S : 4mm lead screw 2S : 2mm lead screw	30: 30mm 50: 50mm	A1: ACON RACON ASEL A3: AMEC ASEP	N : None P : 1m S : 3m M : 5m X □□ : Custom Length	K1~3 : Connector cable exit direction LA : Power-saving

* See page Pre-35 for an explanation of the naming convention.

Power-saving

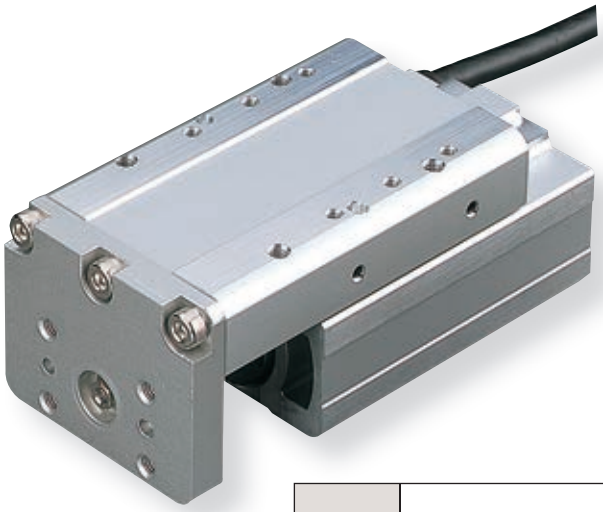

Technical References P. A-5

POINT Notes on Selection

(1) The payload is the value when the actuator is operated at an acceleration of 0.3 G (0.2G for lead 2, if used vertically and for lead screw specification). The acceleration limit is the value indicated above.

(2) If the actuator is used vertically, pay attention to rod contact because the rod will come down when the power is turned off.

Actuator Specifications

■ Lead and Load Capacity

Model	Motor Output (W)	Feed Screw	Lead (mm)	Max. Load Capacity Horizontal (kg)	Max. Load Capacity Vertical (kg)	Rated Thrust (N)	Positioning Repeatability (mm)	Stroke (mm)
RCA2-TWA4NA-I-20-6- ① - ② - ③	20	Ball screw	6	2	0.5	33.8	±0.02	30 50
RCA2-TWA4NA-I-20-4- ① - ② - ③			4	3	0.75	50.7		
RCA2-TWA4NA-I-20-2- ① - ② - ③			2	6	1.5	101.5		
RCA2-TWA4NA-I-20-6S- ① - ② - ③	20	Lead screw	6	0.25	0.125	19.9	±0.05	30 50
RCA2-TWA4NA-I-20-4S- ① - ② - ③			4	0.5	0.25	29.8		
RCA2-TWA4NA-I-20-2S- ① - ② - ③			2	1	0.5	59.7		

Legend ① Compatible controller ② Cable length ③ Options

■ Stroke and Maximum Speed

Lead		Stroke 30 (mm)	Stroke 50 (mm)
Ball screw	6	270 <220>	300
	4	200	
	2	100	
Lead screw	6	220	300
	4	200	
	2	100	

* The values enclosed in "< >" apply to vertical usage. (Unit: mm/s)

Cable List

Type	Cable Symbol	
Standard (Robot Cables)	**P** (1m)	
	S (3m)	
	M (5m)	
Special Lengths	**X06** (6m) ~ **X10** (10m)	
	X11 (11m) ~ **X15** (15m)	
	X16 (16m) ~ **X20** (20m)	

* The RCA2 comes standard with a robot cable.
* See page A-39 for cables for maintenance.

Option List

Name	Option Code	See Page	
Cable exit from left	**K1**	→ A-32	
Cable exit from front	**K2**	→ A-32	
Cable exit from right	**K3**	→ A-32	
Power-saving	**LA**	→ A-32	

Actuator Specifications

Item		Description
Drive System		Ball screw/Lead screw ø6mm C10 grade
Lost Motion		Ball screw: 0.1mm or less/Lead screw: 0.3mm or less (initial value)
Frame		Material: Aluminum (white alumite treated)
Allowable Dynamic Moment (Note)		Ma: 9.9 N•m Mb: 9.9 N•m Mc: 3.3 N•m
Ambient Operating Temp./Humidity		0~40°C, 85% RH or less (non-condensing)
Service Life	Lead screw specification	Horizontal specification: 10 million cycles Vertical specification: 5 million cycles
	Ball screw specification	5000 km or 50 million cycles

(Note) Based on a 5000 km service life set for the guide.

Dimensions

CAD drawings can be downloaded from IAI website. www.robocylinder.de

For Special Orders P. A-9

2/3D CAD

*1 The motor-encoder cable is connected here. See page A-39 for details on cables.
*2 When homing, the table moves to the mechanical end; therefore, please watch for any interference with the surrounding objects.

ME: Mechanical end
SE: Stroke end

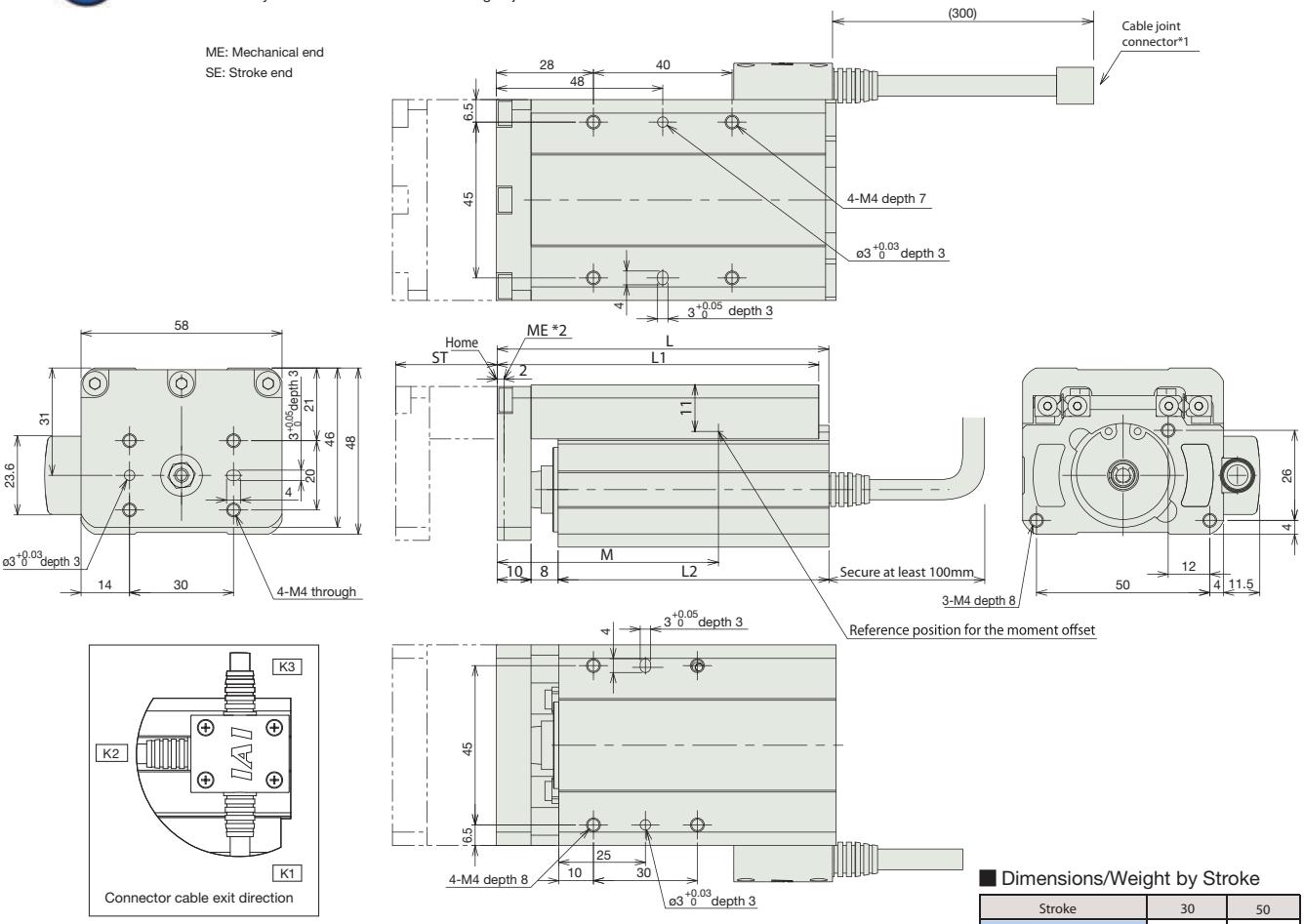

Dimensions/Weight by Stroke

Stroke	30	50
L	98	118
L1	95	115
L2	80	100
M	66	86
Weight (kg)	0.65	0.77

Compatible Controllers

The RCA2 series actuators can operate with the controllers below. Select the controller according to your usage.

Name	External View	Model	Description	Max. Positioning Points	Input Voltage	Power Supply Capacity		See Page
Solenoid Valve Type		AMEC-C-20I①-NP-2-2	Easy-to-use controller, even for beginners	3 points	AC115V / AC230V* *planned	2.4A rated		→ P477
		ASEP-C-20I①-NP-2-0	Operable with same signal as solenoid valve. Supports both single and double solenoid types. No homing necessary with simple absolute type.		DC24V	(Standard) 1.3A rated 4.4A max. (Power-saving) 1.3A rated 2.5A max.		→ P487
Splash-Proof Solenoid Valve Type		ASEP-CW-20I①-NP-2-0						
Positioner Type		ACON-C-20I①-NP-2-0	Positioning is possible for up to 512 points	512 points				→ P535
Safety-Compliant Positioner Type		ACON-CG-20I①-NP-2-0						
Pulse Train Input Type (Differen tial Line Driver)		ACON-PL-20I①-NP-2-0	Pulse train input type with differential line driver support	(–)				
Pulse Train Input Type (Open Collector)		ACON-PO-20I①-NP-2-0	Pulse train input type with open collector support					
Serial Communication Type		ACON-SE-20I①-N-0-0	Dedicated to serial communication	64 points				
Field Network Type		RACON-20①	Dedicated to field network	768 points				→ P503
Program Control Type		ASEL-C-1-20I①-NP-2-0	Programmed operation is possible Operation is possible on up to 2 axes	1500 points				→ P567

* This is for the single-axis ASEL.
* ① is a placeholder for the code "LA" if the power-saving option is specified.

Slider Type
Mini
Standard
Controllers Integrated
Rod Type
Mini
Standard
Controllers Integrated
Table/Arm /Flat Type
Mini
Standard
Gripper/ Rotary Type
Linear Motor Type
Cleanroom Type
Splash Proof
Controllers
PMEC /AMEC
PSEP /ASEP
ROBO NET
ERC2
PCON
ACON
SCON
PSEL
ASEL
SSEL
XSEL
Pulse Motor
Servo Motor (24V)
Servo Motor (230V)
Linear Motor

RCA2-TFA3NA

RoboCylinder Mini Table Type Short-Length Flat Type 61mm Width
24V Servo Motor Ball Screw/Lead Screw

■ Configuration: **RCA2 – TFA3NA – I – 10 – ☐ – ☐ – ☐ – ☐ – ☐ – ☐**

Series	Type	Encoder	Motor	Lead	Stroke	Compatible Controllers	Cable Length	Option
		I: Incremental * The simple absolute encoder is also considered type "I".	10: 10W Servo motor	4 : Ball screw 4mm 2 : Ball screw 2mm 1 : Ball screw 1mm 4S : lead screw 4mm 2S : lead screw 2mm 1S : lead screw 1mm	30: 30mm 50: 50mm	A1 : ACON RACON ASEL A3 : AMEC ASEP	N : None P : 1m S : 3m M : 5m X ☐☐ : Custom Length	K1~3 : Connector cable exit direction LA : Power-saving

* See page Pre-35 for an explanation of the naming convention.

Power-saving

Technical References P. A-5

POINT Notes on Selection

(1) The payload is the value when the actuator is operated at an acceleration of 0.3 G (0.2G for lead 1, if used vertically and for lead screw specification). The acceleration limit is the value indicated above.

(2) If the actuator is used vertically, pay attention to rod contact because the rod will come down when the power is turned off.

Actuator Specifications

■ Lead and Load Capacity

Model	Motor output (W)	Feed screw	Lead (mm)	Maximum payload Horizontal (kg)	Maximum payload Vertical (kg)	Rated thrust (N)	Positioning Repeatability (mm)	Stroke (mm)
RCA2-TFA3NA-I-10-4-①-②-③-④	10	Ball screw	4	0.75	0.25	42.7	±0.02	30 50
RCA2-TFA3NA-I-10-2-①-②-③-④			2	1.5	0.5	85.5		
RCA2-TFA3NA-I-10-1-①-②-③-④			1	3	1	170.9		
RCA2-TFA3NA-I-10-4S-①-②-③-④	10	Lead screw	4	0.25	0.125	25.1	±0.05	30 50
RCA2-TFA3NA-I-10-2S-①-②-③-④			2	0.5	0.25	50.3		
RCA2-TFA3NA-I-10-1S-①-②-③-④			1	1	0.5	100.5		

Legend ① Stroke ② Compatible Controllers ③ Cable length ④ Option

■ Stroke and Maximum Speed

	Lead \ Stroke	30 (mm)	50 (mm)
Ball screw	4	200	
	2	100	
	1	50	
Lead screw	4	200	
	2	100	
	1	50	

(Unit = mm/s)

Cable List

Type	Cable Symbol	
Standard (Robot Cables)	**P** (1m)	
	S (3m)	
	M (5m)	
Special Lengths	**X06** (6m) ~ **X10** (10m)	
	X11 (11m) ~ **X15** (15m)	
	X16 (16m) ~ **X20** (20m)	

* The RCA2 comes standard with a robot cable.
* See page A-39 for cables for maintenance.

Actuator Specifications

Item		Description
Drive System		Ball screw/Lead screw ø4mm C10 grade
Lost Motion		0.3mm or less (initial value)
Frame		Material: Aluminum (white alumite treated)
Allowable Dynamic Moment (Note)		Ma: 9.9 N•m Mb: 9.9 N•m Mc: 3.3 N•m
Ambient Operating Temp./Humidity		0~40°C, 85% RH or less (non-condensing)
Service Life	Lead screw specification	Horizontal specification: 10 million cycles Vertical specification: 5 million cycles
	Ball screw specification	2mm-/4mm-lead model: 5000 km or 50 million cycles 1mm-lead model: 3000 km or 50 million cycles

(Note) Based on a 5000 or 3000 km service life set for the guide.

Option List

Name	Option Code	See Page	
Cable exit from left	**K1**	→ A-32	
Cable exit from front	**K2**	→ A-32	
Cable exit from right	**K3**	→ A-32	
Power-saving	**LA**	→ A-32	

Dimensions

CAD drawings can be downloaded from IAI website. www.robocylinder.de

For Special Orders P. A-9

2/3D CAD

*1 The motor-encoder cable is connected here. See page A-39 for details on cables.
*2 When homing, the table moves to the mechanical end; therefore, please watch for any interference with the surrounding objects.

ME: Mechanical end
SE: Stroke end

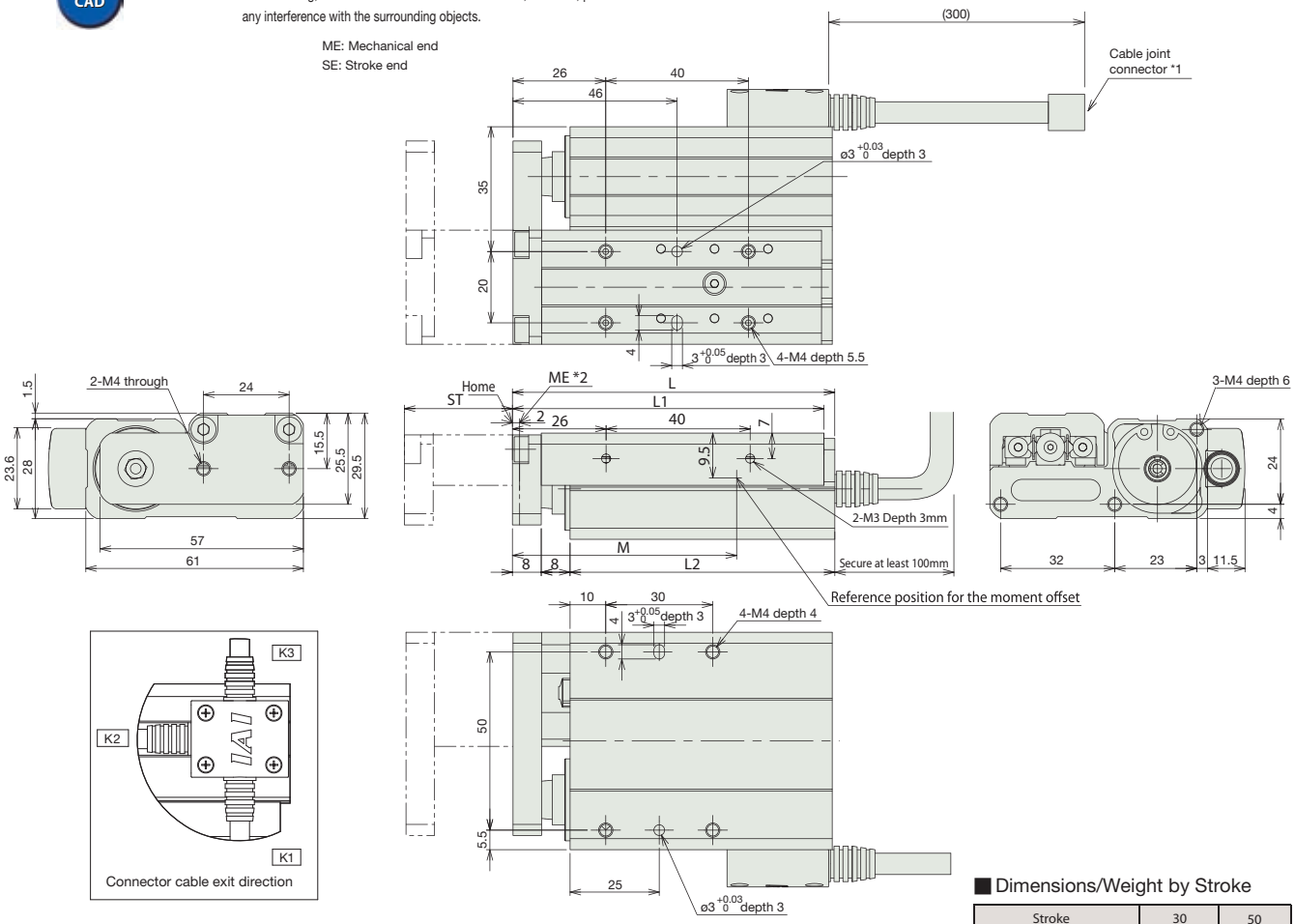

Dimensions/Weight by Stroke

Stroke	30	50
L	89.5	109.5
L1	86.5	106.5
L2	73.5	93.5
M	64	84
Weight (kg)	0.40	0.48

Compatible Controllers

The RCA2 series actuators can operate with the controllers below. Select the controller according to your usage.

Name	External View	Model	Description	Max. Positioning Points	Input Voltage	Power Supply Capacity		See Page
Solenoid Valve Type		AMEC-C-10I①-NP-2-2	Easy-to-use controller, even for beginners	3 points	AC115V / AC230V* *planned	2.4A rated		→ P477
		ASEP-C-10I①-NP-2-0	Operable with same signal as solenoid valve. Supports both single and double solenoid types. No homing necessary with simple absolute type.		DC24V	(Standard) 1.3A rated 4.4A max. (Power-saving) 1.3A rated 2.5A max.		→ P487
Splash-Proof Solenoid Valve Type		ASEP-CW-10I①-NP-2-0						
Positioner Type		ACON-C-10I①-NP-2-0	Positioning is possible for up to 512 points	512 points				→ P535
Safety-Compliant Positioner Type		ACON-CG-10I①-NP-2-0						
Pulse Train Input Type (Differen tial Line Driver)		ACON-PL-10I①-NP-2-0	Pulse train input type with differential line driver support	(–)				
Pulse Train Input Type (Open Collector)		ACON-PO-10I①-NP-2-0	Pulse train input type with open collector support					
Serial Communication Type		ACON-SE-10I①-N-0-0	Dedicated to serial communication	64 points				
Field Network Type		RACON-10①	Dedicated to field network	768 points				→ P503
Program Control Type		ASEL-C-1-10I①-NP-2-0	Programmed operation is possible Operation is possible on up to 2 axes	1500 points				→ P567

* This is for the single-axis ASEL.
* ① is a placeholder for the code "LA" if the power-saving option is specified.

Slider Type
Mini
Standard
Controllers Integrated
Rod Type
Mini
Standard
Controllers Integrated
Table/Arm /Flat Type
Mini
Standard
Gripper/ Rotary Type
Linear Motor Type
Cleanroom Type
Splash Proof
Controllers
PMEC /AMEC
PSEP /ASEP
ROBO NET
ERC2
PCON
ACON
SCON
PSEL
ASEL
SSEL
XSEL
Pulse Motor
Servo Motor (24V)
Servo Motor (230V)
Linear Motor

RCA2-TFA4NA

RoboCylinder Mini Table Type Short-Length Flat Type 71mm Width
24V Servo Motor Ball Screw/Lead Screw

■ Configuration: **RCA2 – TFA4NA – I – 20 – ☐ – ☐ – ☐ – ☐ – ☐ – ☐**

Series	Type	Encoder	Motor	Lead	Stroke	Compatible Controllers	Cable Length	Option
		I: Incremental * The simple absolute encoder is also considered type "I".	20: 20W Servo motor	6: 6mm ball screw 4: 4mm ball screw 2: 2mm ball screw 6S: 6mm lead screw 4S: 4mm lead screw 2S: 2mm lead screw	30: 30mm 50: 50mm	A1: ACON RACON ASEL A3: AMEC ASEP	N : None P : 1m S : 3m M : 5m X ☐☐ : Custom Length	K1~3 : Connector cable exit direction LA : Power-saving

* See page Pre-35 for an explanation of the naming convention.

Power-saving

Technical References P. A-5

POINT Notes on Selection

(1) The payload is the value when the actuator is operated at an acceleration of 0.3 G (0.2G for lead 2, if used vertically and for lead screw specification). The acceleration limit is the value indicated above.

(2) If the actuator is used vertically, pay attention to rod contact because the rod will come down when the power is turned off.

Actuator Specifications

■ Lead and Load Capacity

Model	Motor Output (W)	Feed Screw	Lead (mm)	Max. Load Capacity Horizontal (kg)	Max. Load Capacity Vertical (kg)	Rated Thrust (N)	Positioning Repeatability (mm)	Stroke (mm)
RCA2-TFA4NA-I-20-6- ① - ② - ③	20	Ball screw	6	2	0.5	33.8	±0.02	30 50
RCA2-TFA4NA-I-20-4- ① - ② - ③			4	3	0.75	50.7		
RCA2-TFA4NA-I-20-2- ① - ② - ③			2	6	1.5	101.5		
RCA2-TFA4NA-I-20-6S- ① - ② - ③	20	Lead screw	6	0.25	0.125	19.9	±0.05	30 50
RCA2-TFA4NA-I-20-4S- ① - ② - ③			4	0.5	0.25	29.8		
RCA2-TFA4NA-I-20-2S- ① - ② - ③			2	1	0.5	59.7		

Legend ① Compatible controller ② Cable length ③ Options

■ Stroke and Maximum Speed

Lead		Stroke 30 (mm)	Stroke 50 (mm)
Ball screw	6	270 <220>	300
	4	200	
	2	100	
Lead screw	6	220	300
	4	200	
	2	100	

* The values enclosed in "< >" apply to vertical usage. (Unit: mm/s)

Cable List

Type	Cable Symbol	
Standard (Robot Cables)	**P** (1m)	
	S (3m)	
	M (5m)	
Special Lengths	**X06** (6m) ~ **X10** (10m)	
	X11 (11m) ~ **X15** (15m)	
	X16 (16m) ~ **X20** (20m)	

* The RCA2 comes standard with a robot cable.
* See page A-39 for cables for maintenance.

Option List

Name	Option Code	See Page	
Cable exit from left	**K1**	→ A-32	
Cable exit from front	**K2**	→ A-32	
Cable exit from right	**K3**	→ A-32	
Power-saving	**LA**	→ A-32	

Actuator Specifications

Item		Description
Drive System		Ball screw/Lead screw ø6mm C10 grade
Lost Motion		Ball screw: 0.1mm or less/Lead screw: 0.3mm or less (initial value)
Frame		Material: Aluminum (white alumite treated)
Allowable Dynamic Moment (Note)		Ma: 9.9 N•m Mb: 9.9 N•m Mc: 3.3 N•m
Ambient Operating Temp./Humidity		0~40°C, 85% RH or less (non-condensing)
Service Life	Lead screw specification	Horizontal specification: 10 million cycles Vertical specification: 5 million cycles
	Ball screw specification	5000 km or 50 million cycles

(Note) Based on a 5000 km service life set for the guide.

Dimensions

CAD drawings can be downloaded from IAI website. www.robocylinder.de

For Special Orders P. A-9

2/3D CAD

*1 The motor-encoder cable is connected here. See page A-39 for details on cables.
*2 When homing, the table moves to the mechanical end; therefore, please watch for any interference with the surrounding objects.

ME: Mechanical end
SE: Stroke end

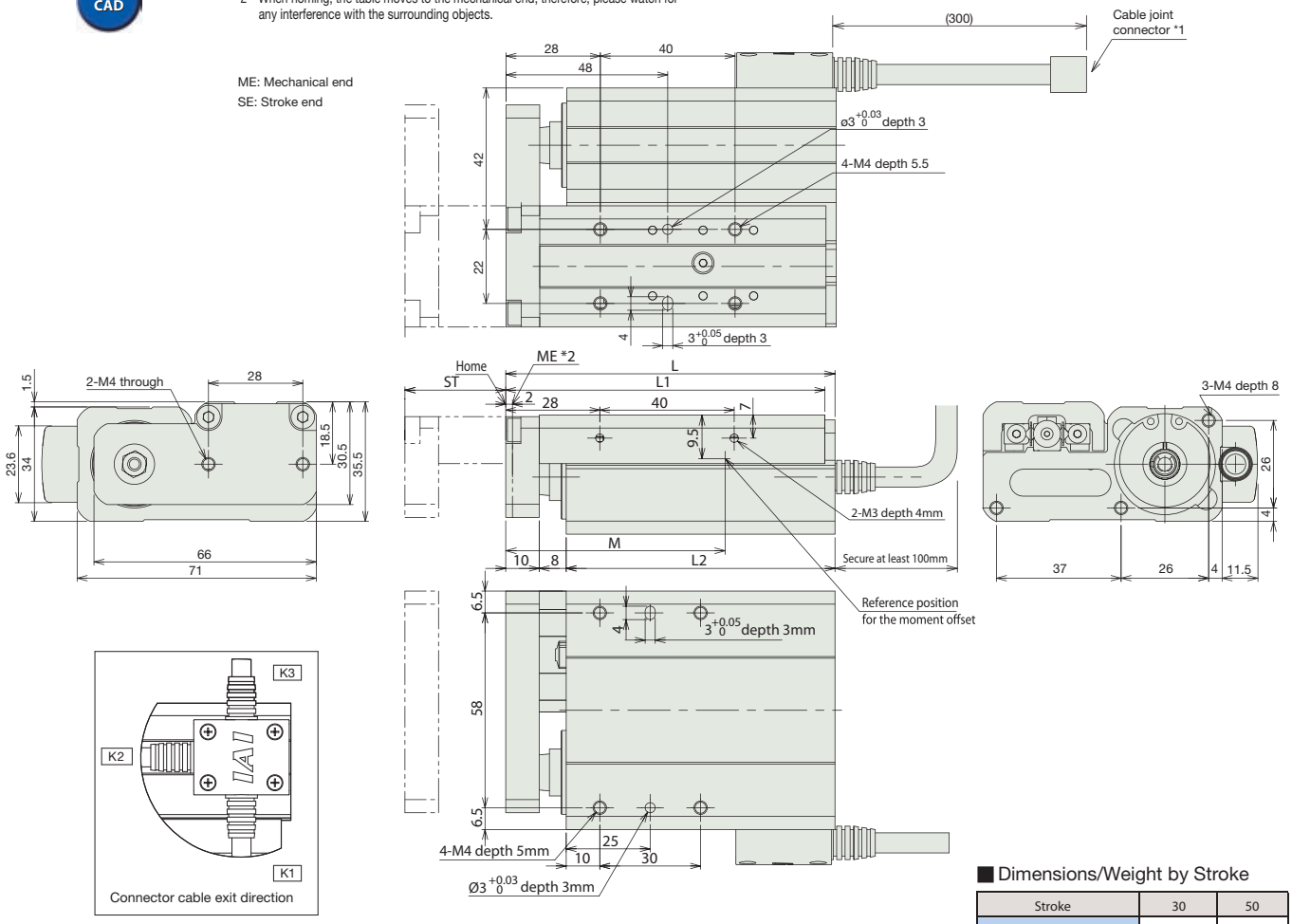

Dimensions/Weight by Stroke

Stroke	30	50
L	98	118
L1	95	115
L2	80	100
M	66	86
Weight (kg)	0.60	0.72

Compatible Controllers

The RCA2 series actuators can operate with the controllers below. Select the controller according to your usage.

Name	External View	Model	Description	Max. Positioning Points	Input Voltage	Power Supply Capacity		See Page
Solenoid Valve Type		AMEC-C-20I①-NP-2-2	Easy-to-use controller, even for beginners	3 points	AC115V / AC230V* *planned	2.4A rated		→ P477
		ASEP-C-20I①-NP-2-0	Operable with same signal as solenoid valve. Supports both single and double solenoid types. No homing necessary with simple absolute type.		DC24V	(Standard) 1.3A rated 4.4A max. (Power-saving) 1.3A rated 2.5A max.		→ P487
Splash-Proof Solenoid Valve Type		ASEP-CW-20I①-NP-2-0						
Positioner Type		ACON-C-20I①-NP-2-0	Positioning is possible for up to 512 points	512 points				→ P535
Safety-Compliant Positioner Type		ACON-CG-20I①-NP-2-0						
Pulse Train Input Type (Differen tial Line Driver)		ACON-PL-20I①-NP-2-0	Pulse train input type with differential line driver support	(–)				
Pulse Train Input Type (Open Collector)		ACON-PO-20I①-NP-2-0	Pulse train input type with open collector support					
Serial Communication Type		ACON-SE-20I①-N-0-0	Dedicated to serial communication	64 points				
Field Network Type		RACON-20①	Dedicated to field network	768 points				→ P503
Program Control Type		ASEL-C-1-20I①-NP-2-0	Programmed operation is possible Operation is possible on up to 2 axes	1500 points				→ P567

* This is for the single-axis ASEL.
* ① is a placeholder for the code "LA" if the power-saving option is specified.

Slider Type
Mini
Standard
Controllers Integrated
Rod Type
Mini
Standard
Controllers Integrated
Table/Arm /Flat Type
Mini
Standard
Gripper/ Rotary Type
Linear Motor Type
Cleanroom Type
Splash Proof
Controllers
PMEC /AMEC
PSEP /ASEP
ROBO NET
ERC2
PCON
ACON
SCON
PSEL
ASEL
SSEL
XSEL
Pulse Motor
Servo Motor (24V)
Servo Motor (230V)
Linear Motor

RCA2-TA4C

RoboCylinder Mini Table Type Motor Unit Coupled 40mm Width
24V Servo Motor Ball Screw

■ Configuration: RCA2 – TA4C – I – 10 – □ – □ – □ – □ – □

Series	Type	Encoder	Motor	Lead	Stroke	Compatible Controllers	Cable Length	Option
		I: Incremental * The simple absolute encoder is also considered type "I".	10: 10W Servo motor	6 : 6mm 4 : 4mm 2 : 2mm	20: 20mm \ 100: 100mm (10mm pitch increments)	A1 : ACON RACON ASEL A3 : AMEC ASEP	N : None P : 1m S : 3m M : 5m X □□ : Custom	K2 : Connector cable exit direction LA : Power-saving

* See page Pre-35 for an explanation of the naming convention.

Power-saving

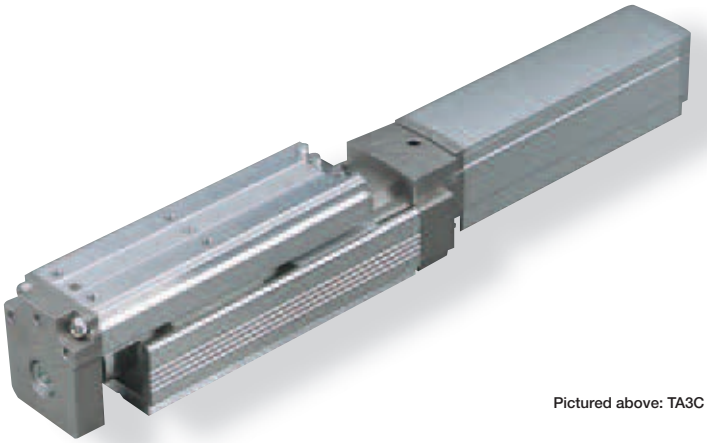

Pictured above: TA3C

Technical References P. A-5

POINT Notes on Selection

(1) The load capacity is based on operation at an acceleration of 0.3G (0.2G for the 2mm-lead model, or when used vertically).
0.3G (0.2G for 2mm lead) is the upper limit of the acceleration.

Actuator Specifications

■ Lead and Load Capacity

Model	Motor Output (W)	Feed Screw	Lead (mm)	Max. Load Capacity Horizontal (kg)	Max. Load Capacity Vertical (kg)	Rated Thrust (N)	Positioning Repeatability (mm)	Stroke (mm)
RCA2-TA4C-I-10-6-①-②-③-④	10	Ball screw	6	1	0.5	28	±0.02	20~100 (10mm increments)
RCA2-TA4C-I-10-4-①-②-③-④			4	2	1	43		
RCA2-TA4C-I-10-2-①-②-③-④			2	3	1.5	85		

Legend ① Stroke ② Compatible controller ③ Cable length ④ Options

■ Stroke and Maximum Speed

Lead	Stroke 20 ~ 100 (10mm increments)
Ball screw 6	300
Ball screw 4	200
Ball screw 2	100

(Unit: mm/s)

Cable List

Type	Cable Symbol	
Standard (Robot Cables)	P (1m)	
	S (3m)	
	M (5m)	
Special Lengths	X06 (6m) ~ X10 (10m)	
	X11 (11m) ~ X15 (15m)	
	X16 (16m) ~ X20 (20m)	

* The RCA2 comes standard with a robot cable.
* See page A-39 for cables for maintenance.

Actuator Specifications

Item	Description
Drive System	Ball screw ø6mm C10 grade
Lost Motion	0.1mm or less
Base	Material: Aluminum (white alumite treated)
Allowable Dynamic Moment (Note)	Ma: 4.2 N·m Mb: 6 N·m Mc: 8.2 N·m
Ambient Operating Temp./Humidity	0~40°C, 85% RH or less (non-condensing)

(Note) Based on a 5,000km service life.

Directions of Allowable Load Moments

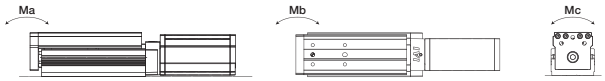

Option List

Name	Option Code	See Page	
Brake	B	→ A-25	
Cable exit direction (Top)	CJT	→ A-25	
Cable exit direction (Right)	CJR		
Cable exit direction (Left)	CJL		
Cable exit direction (Bottom)	CJB		
Power-saving	LA	→ A-32	
Reversed-home	NM	→ A-33	

Dimensions

CAD drawings can be downloaded from IAI website. www.robocylinder.de

2/3D CAD

For Special Order P. A-9

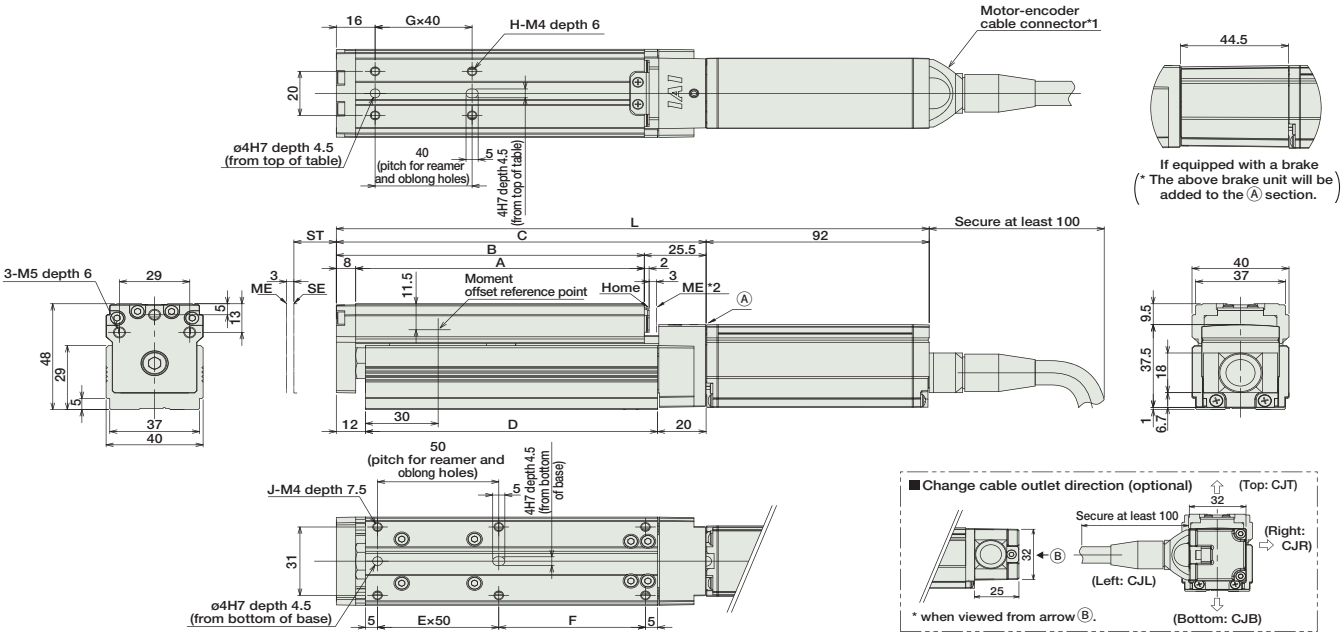

*1 The motor-encoder cable is connected directly to the motor cover of the actuator. See page A-39 for details on cables.

*2 When homing, the slider moves to the mechanical end; therefore, please watch for any interference with the surrounding objects.
ST : Stroke
ME : Mechanical end
SE : Stroke end

Dimensions/Weight by Stroke

* Adding a brake will increase the actuator's weight by 0.2kg.

Stroke		20	30	40	50	60	70	80	90	100
L	No Brake	214.5	224.5	234.5	244.5	254.5	264.5	274.5	284.5	294.5
	Brake-equipped	259	269	279	289	299	309	319	329	339
A		89	99	109	119	129	139	149	159	169
B		97	107	117	127	137	147	157	167	177
C		122.5	132.5	142.5	152.5	162.5	172.5	182.5	192.5	202.5
D		90.5	100.5	110.5	120.5	130.5	140.5	150.5	160.5	170.5
E		1	1	1	1	2	2	2	2	2
F		30.5	40.5	50.5	60.5	20.5	30.5	40.5	50.5	60.5
G		1	1	1	1	2	2	2	2	2
H		4	4	4	4	6	6	6	6	6
J		6	6	6	6	8	8	8	8	8
Weight (kg)		0.8	0.8	0.8	0.9	0.9	0.9	1.0	1.0	1.0

Compatible Controllers

The RCA2 series actuators can operate with the controllers below. Select the controller according to your usage.

Name	External View	Model	Description	Max. Positioning Points	Input Voltage	Power Supply Capacity		See Page
Solenoid Valve Type		AMEC-C-10I①-NP-2-2	Easy-to-use controller, even for beginners	3 points	AC115V / AC230V* *planned	2.4A rated		→ P477
		ASEP-C-10I①-NP-2-0	Operable with same signal as solenoid valve. Supports both single and double solenoid types. No homing necessary with simple absolute type.		DC24V	(Standard) 1.3A rated 4.4A max. (Power-saving) 1.3A rated 2.5A max.		→ P487
Splash-Proof Solenoid Valve Type		ASEP-CW-10I①-NP-2-0						
Positioner Type		ACON-C-10I①-NP-2-0	Positioning is possible for up to 512 points	512 points				→ P535
Safety-Compliant Positioner Type		ACON-CG-10I①-NP-2-0						
Pulse Train Input Type (Differential Line Driver)		ACON-PL-10I①-NP-2-0	Pulse train input type with differential line driver support	(–)				
Pulse Train Input Type (Open Collector)		ACON-PO-10I①-NP-2-0	Pulse train input type with open collector support					
Serial Communication Type		ACON-SE-10I①-N-0-0	Dedicated to serial communication	64 points				
Field Network Type		RACON-10①	Dedicated to field network	768 points				→ P503
Program Control Type		ASEL-C-1-10I①-NP-2-0	Programmed operation is possible Operation is possible on up to 2 axes	1500 points				→ P567

* This is for the single-axis ASEL.
* ① is a placeholder for the code "LA" if the power-saving option is specified.

Slider Type
Mini
Standard
Controllers Integrated
Rod Type
Mini
Standard
Controllers Integrated
Table/Arm /Flat Type
Mini
Standard
Gripper/ Rotary Type
Linear Motor Type
Cleanroom Type
Splash Proof
Controllers
PMEC /AMEC
PSEP /ASEP
ROBO NET
ERC2
PCON
ACON
SCON
PSEL
ASEL
SSEL
XSEL
Pulse Motor
Servo Motor (24V)
Servo Motor (230V)
Linear Motor

RCA2-TA4R

RoboCylinder Mini Table Type Side-Mounted Motor 40mm Width 24V Servo Motor Ball Screw

■ Configuration: RCA2 – TA4R – I – 10 – ☐ – ☐ – ☐ – ☐ – ☐

Series	Type	Encoder	Motor	Lead	Stroke	Compatible Controllers	Cable Length	Option
RCA2	TA4R	I: Incremental * The simple absolute encoder is also considered type "I".	10: 10W Servo motor	6 : 6mm 4 : 4mm 2 : 2mm	20: 20mm \ 100: 100mm (10mm pitch increments)	A1 : ACON RACON ASEL A3 : AMEC ASEP	N : None P : 1m S : 3m M : 5m X ☐☐ : Custom	See Options below * Be sure to specify which side the motor is to be mounted (ML/MR).

* See page Pre-35 for an explanation of the naming convention.

Power-saving

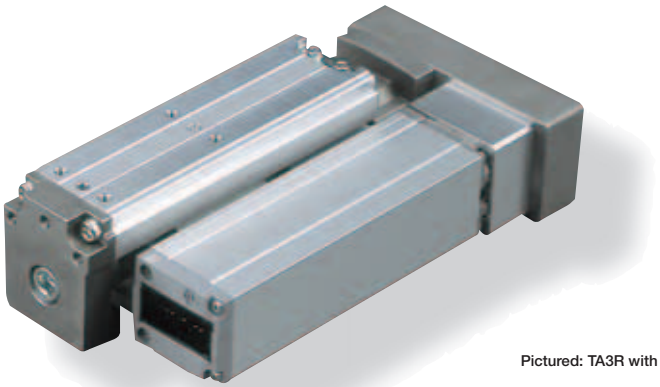

Pictured: TA3R with left-mounted motor (ML).

Technical References P. A-5

POINT Notes on Selection

(1) The load capacity is based on operation at an acceleration of 0.3G (0.2G for the 2mm-lead model, or when used vertically).
0.3G (0.2G for 2mm lead) is the upper limit of the acceleration.

Actuator Specifications

■ Lead and Load Capacity

Model	Motor Output (W)	Feed Screw	Lead (mm)	Max. Load Capacity Horizontal (kg)	Max. Load Capacity Vertical (kg)	Rated Thrust (N)	Positioning Repeatability (mm)	Stroke (mm)
RCA2-TA4R-I-10-6-①-②-③-④	10	Ball screw	6	1	0.5	28	±0.02	20~100 (10mm increments)
RCA2-TA4R-I-10-4-①-②-③-④			4	2	1	43		
RCA2-TA4R-I-10-2-①-②-③-④			2	3	1.5	85		

Legend: ① Stroke ② Compatible controller ③ Cable length ④ Options

■ Stroke and Maximum Speed

	Lead \ Stroke	20 ~ 100 (10mm increments)
Ball screw	6	300
	4	200
	2	100

(Unit: mm/s)

Cable List

Type	Cable Symbol	
Standard Type (Robot Cables)	P (1m)	
	S (3m)	
	M (5m)	
Special Lengths	X06 (6m) ~ X10 (10m)	
	X11 (11m) ~ X15 (15m)	
	X16 (16m) ~ X20 (20m)	

* The RCA2 comes standard with a robot cable.
* See page A-39 for cables for maintenance.

Actuator Specifications

Item	Description
Drive System	Ball screw ø6mm C10 grade
Lost Motion	0.1mm or less
Base	Material: Aluminum (white alumite treated)
Allowable Dynamic Moment (Note)	Ma: 4.2 N·m Mb: 6 N·m Mc: 8.2 N·m
Ambient Operating Temp./Humidity	0~40°C, 85% RH or less (non-condensing)

(Note) Based on a 5,000km service life.

Option List

Name	Option Code	See Page	
Brake	B	→ A-25	
Cable exit direction (Top)	CJT	→ A-25	
Cable exit direction (Outside)	CJO		
Cable exit direction (Bottom)	CJB		
Power-saving	LA	→ A-32	
Left-Mounted Motor (Standard)	ML	→ A-33	
Right-mounted motor	MR	→ A-33	
Reversed-home	NM	→ A-33	

Dimensions

CAD drawings can be downloaded from IAI website. www.robocylinder.de

2/3D CAD

For Special Order P. A-9

* The diagram below shows a left-mounted motor model.

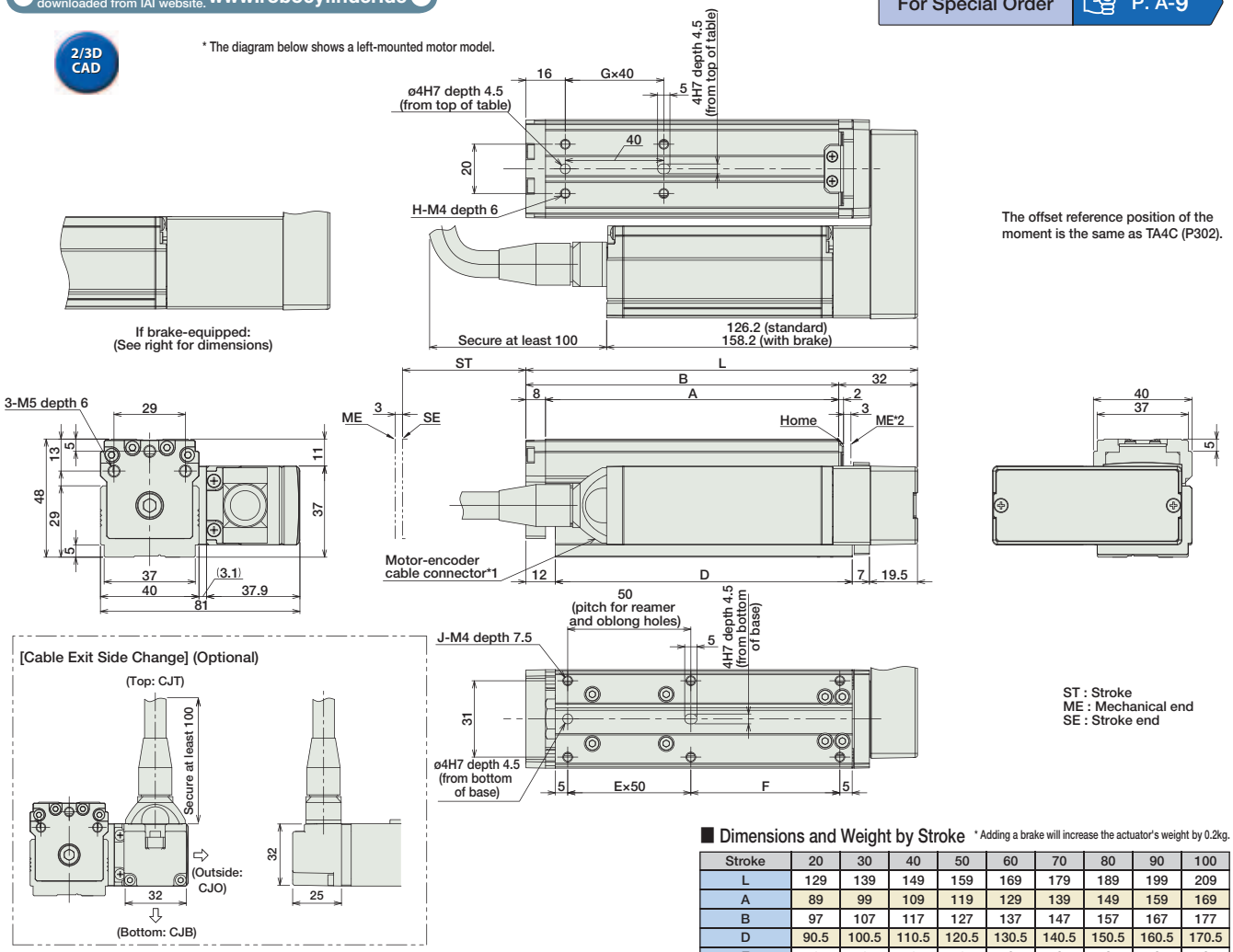

The offset reference position of the moment is the same as TA4C (P302).

ST : Stroke
ME : Mechanical end
SE : Stroke end

*1 The motor-encoder cable is connected directly to the motor cover of the actuator. See page A-39 for details on cables.

*2 When homing, the slider moves to the mechanical end; therefore, please watch for any interference with the surrounding objects.

Dimensions and Weight by Stroke

* Adding a brake will increase the actuator's weight by 0.2kg.

Stroke	20	30	40	50	60	70	80	90	100
L	129	139	149	159	169	179	189	199	209
A	89	99	109	119	129	139	149	159	169
B	97	107	117	127	137	147	157	167	177
D	90.5	100.5	110.5	120.5	130.5	140.5	150.5	160.5	170.5
E	1	1	1	1	2	2	2	2	2
F	30.5	40.5	50.5	60.5	20.5	30.5	40.5	50.5	60.5
G	1	1	1	1	2	2	2	2	2
H	4	4	4	4	6	6	6	6	6
J	6	6	6	6	8	8	8	8	8
Weight (kg)	0.8	0.9	0.9	0.9	1.0	1.0	1.0	1.1	1.1

Compatible Controllers

The RCA2 series actuators can operate with the controllers below. Select the controller according to your usage.

Name	External View	Model	Description	Max. Positioning Points	Input Voltage	Power Supply Capacity		See Page
Solenoid Valve Type		AMEC-C-10I①-NP-2-2	Easy-to-use controller, even for beginners	3 points	AC115V / AC230V* *planned	2.4A rated		→ P477
		ASEP-C-10I①-NP-2-0	Operable with same signal as solenoid valve. Supports both single and double solenoid types. No homing necessary with simple absolute type.		DC24V	(Standard) 1.3A rated 4.4A max. (Power-saving) 1.3A rated 2.5A max.		→ P487
Splash-Proof Solenoid Valve Type		ASEP-CW-10I①-NP-2-0						
Positioner Type		ACON-C-10I①-NP-2-0	Positioning is possible for up to 512 points	512 points				→ P535
Safety-Compliant Positioner Type		ACON-CG-10I①-NP-2-0						
Pulse Train Input Type (Differential Line Driver)		ACON-PL-10I①-NP-2-0	Pulse train input type with differential line driver support	(–)				
Pulse Train Input Type (Open Collector)		ACON-PO-10I①-NP-2-0	Pulse train input type with open collector support					
Serial Communication Type		ACON-SE-10I①-N-0-0	Dedicated to serial communication	64 points				
Field Network Type		RACON-10①	Dedicated to field network	768 points				→ P503
Program Control Type		ASEL-C-1-10I①-NP-2-0	Programmed operation is possible Operation is possible on up to 2 axes	1500 points				→ P567

* This is for the single-axis ASEL.
* ① is a placeholder for the code "LA", if the power-saving option is specified.